FUZE series

Technical Reference Manual

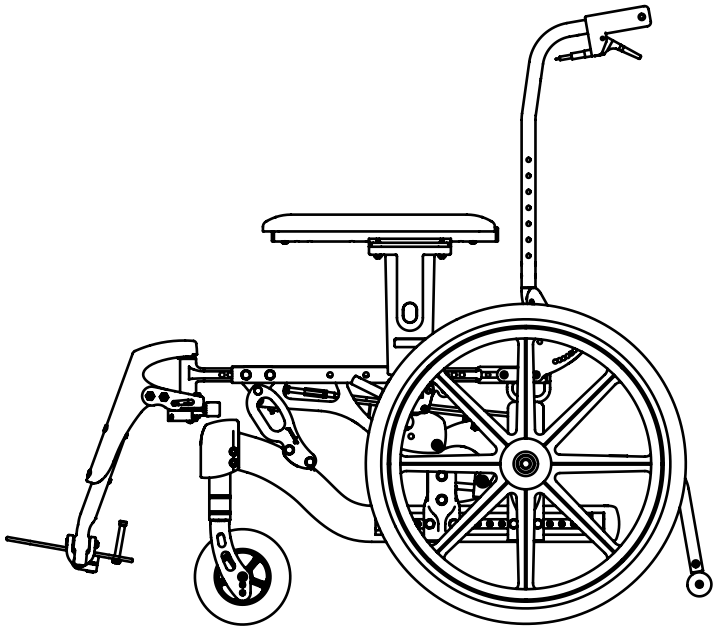

FUZE T20

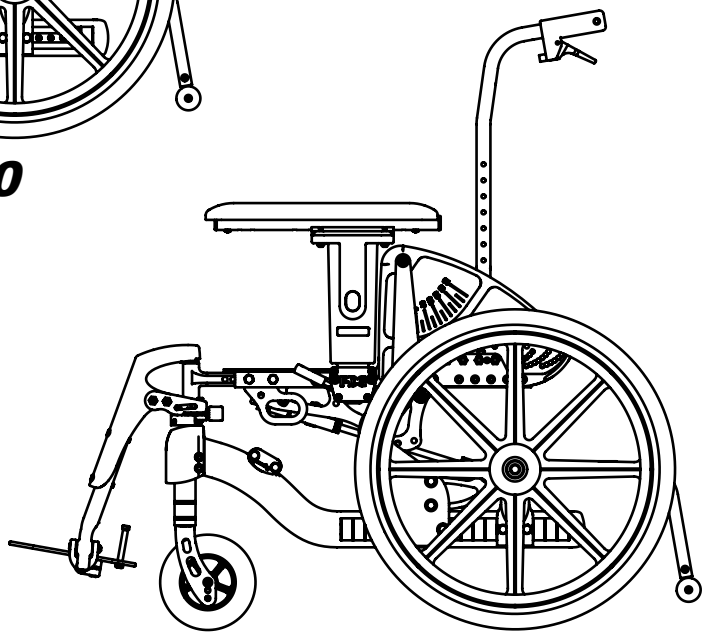

FUZE T50

PDG Product Design Group
318 East Kent Ave S, Unit 103
Vancouver, BC, V5X 4N6
Phone: 604-323-9200 or Toll Free Phone: 888-858-4422
Fax: 604-323-9097 or Toll Free Fax: 877-323-9093
www.pdgmobility.com

CROSSBAR SETUP	1
FUZE T50 FRAME	2
FUZE T20 FRAME	3
BACK	4
CASTER	5
WHEEL LOCK	6
ANTI-TIPPER	7
FRONT RIGGING	8
ARM SETUP	9
SEAT PAN	10
WHEEL	11
CONVERSION KIT	12

Rev	Revision description	ECO#
4	Remove 18" - 22" crossbar version and add Dual mount 21" and 22" version	1296

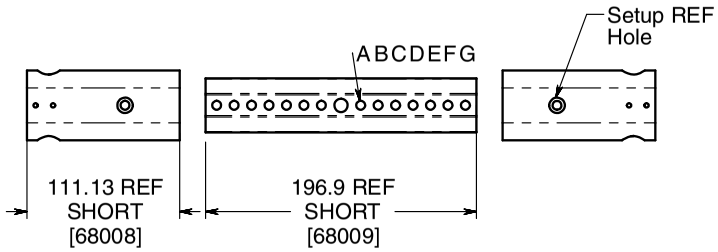

Short				
Chair Width	12"	13"	14"	15"
REF Hole Position	D	E	F	G

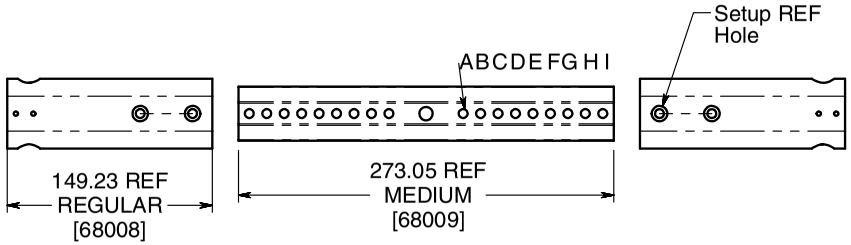

Medium						
Chair Width	15"	16"	17"	18"	19"	20"
REF Hole Position	A	B	C	D	E	F

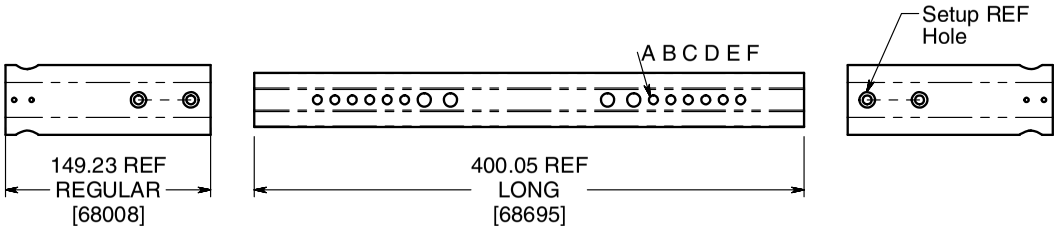

Long			
Chair Width	20"	21"	22"
REF Hole Position	A	B	C

CUS:- [-]

PDG part number	Author	Technical reference	Revised by	Approved by
-	TB	MJ	TB	MJ

Title: Fuze CrossbarSetup Chart

File name (Drawing #): 85010

Status: NA

© 2010 The information contained in this drawing is the sole property of PDG Mobility

Third angle projection

Tolerances unless otherwise stated:
Angular: +/- 1º
Othe x +/-0.8, x.x+/-0.4, x.xx+/-0.15

Units [mm]

Sheet 1 of 1

Date of Issue 2012 May 25

Revision 4

Dimensioning and Tolerancing Standard ASME Y14.5-2009

REV 00

Fuze Junior Crossbar and Push Bar Setup Chart

Crossbar and Push Bar width adjustment table - range from 12" to 14"

Chair Width	12"	13"	14"
Crossbar hole position	4	5	6
Push Bar Link Tube - size	12" - 14"	12" - 14"	12" - 14"
Push Bar Link Tube - hole position	1 & 3	2 & 4	3 & 5

Setup reference hole

Crossbar adjustment range 12" - 14"

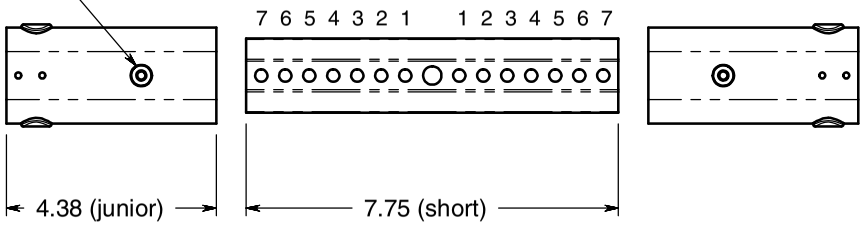

Push Bar adjustment range 12" - 14"

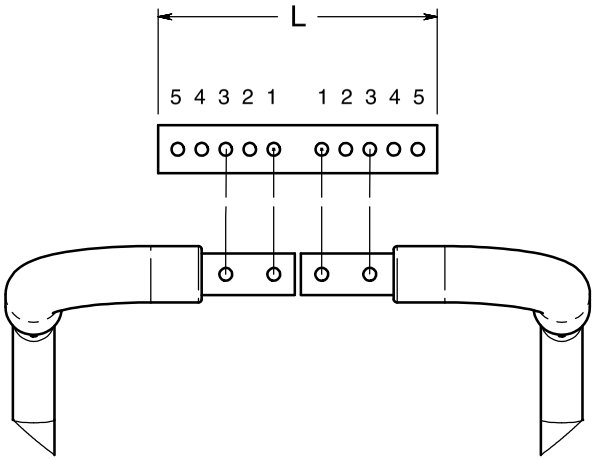

Title: Fuze - Adjustable Crossbar Assembly
Document: 68013
Revision: 0
Date: November 2013

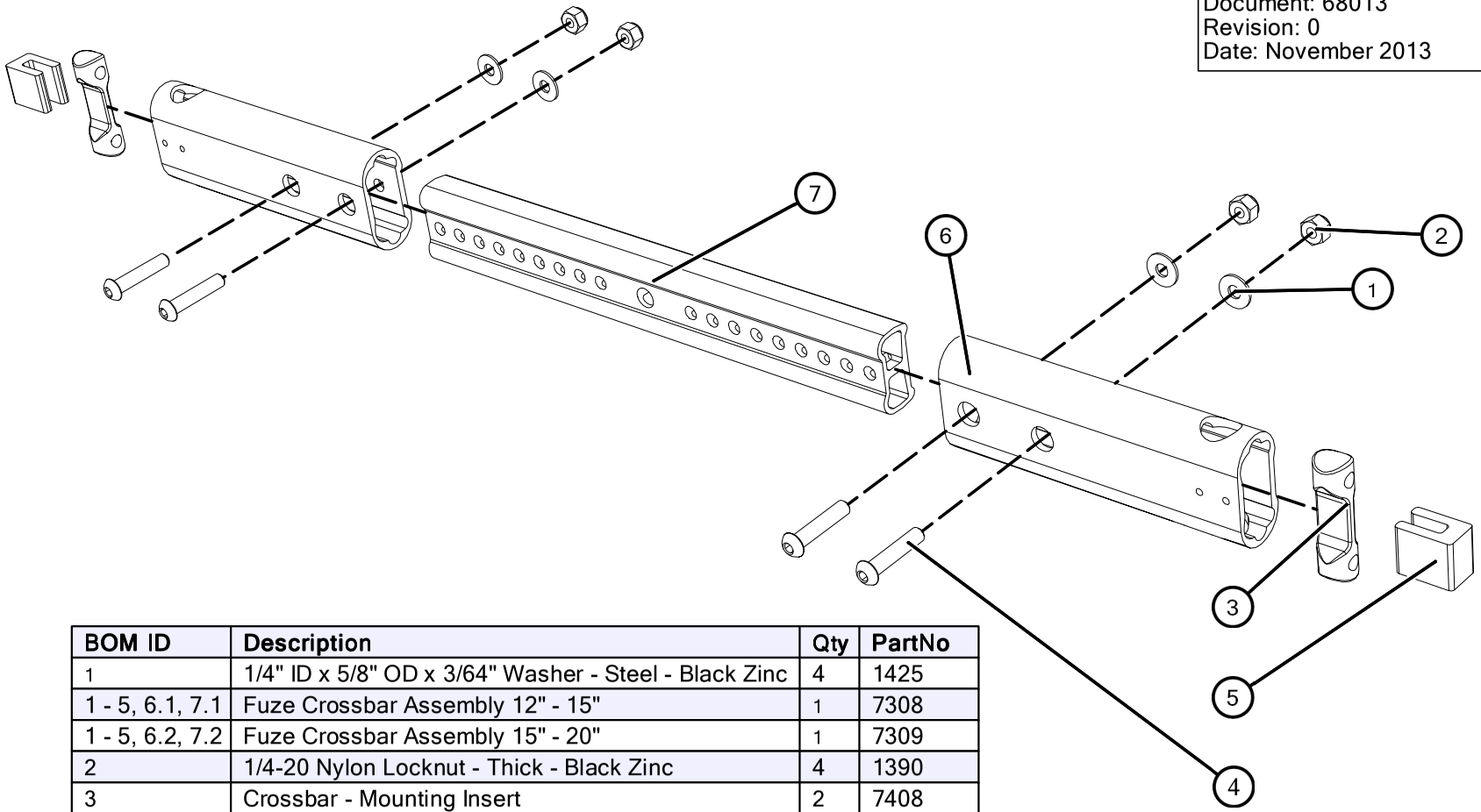

BOM ID	Description	Qty	PartNo
1	1/4" ID x 5/8" OD x 3/64" Washer - Steel - Black Zinc	4	1425
1 - 5, 6.1, 7.1	Fuze Crossbar Assembly 12" - 15"	1	7308
1 - 5, 6.2, 7.2	Fuze Crossbar Assembly 15" - 20"	1	7309
2	1/4-20 Nylon Locknut - Thick - Black Zinc	4	1390
3	Crossbar - Mounting Insert	2	7408
4	1/4-20 x 1-1/4" Socket Button Head - Black Zinc	4	13389
5	Fuze Crossbar Insert Saddle - Lower Frame	2	10253
6	Crossbar - Adj - Outer End tube	2	Pick Size
6.1	Crossbar - Adj - Outer End tube 12" - 15"	2	4953
6.2	Crossbar - Adj - Outer End tube 15" - 20"	2	4954
7	Crossbar - Adj. - Center Inner Tube	1	Pick Size
7.1	Crossbar - Adj. - Center Inner Tube - short	1	4956
7.2	Crossbar - Adj. - Center Inner Tube - medium	1	4857

Fuze Junior Charts

Crossbar Cap Setup

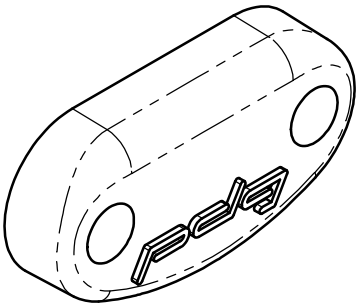

Lower Frame Crossbar Cap

A

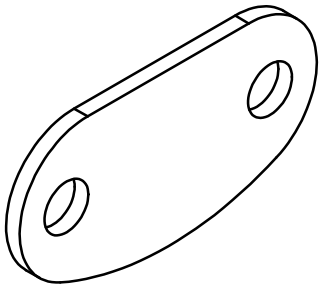

Lower Frame Crossbar Cap - Thin

B

		Rear Wheel Size				
		12"	**16"**	**20"**	**22"**	**24"**
Seat Depth	**13"**	A	A	B*	B*	B*
	14"	A	A	B*	B*	B*
	15"	A	A	B*	B*	B*
	16"	A	A	A	A	A
	17"	A	A	A	A	A
	18"	A	A	A	A	A

** NOTE: for Thin Crossbar Cap use 1½" 5/16-18 Bolt*

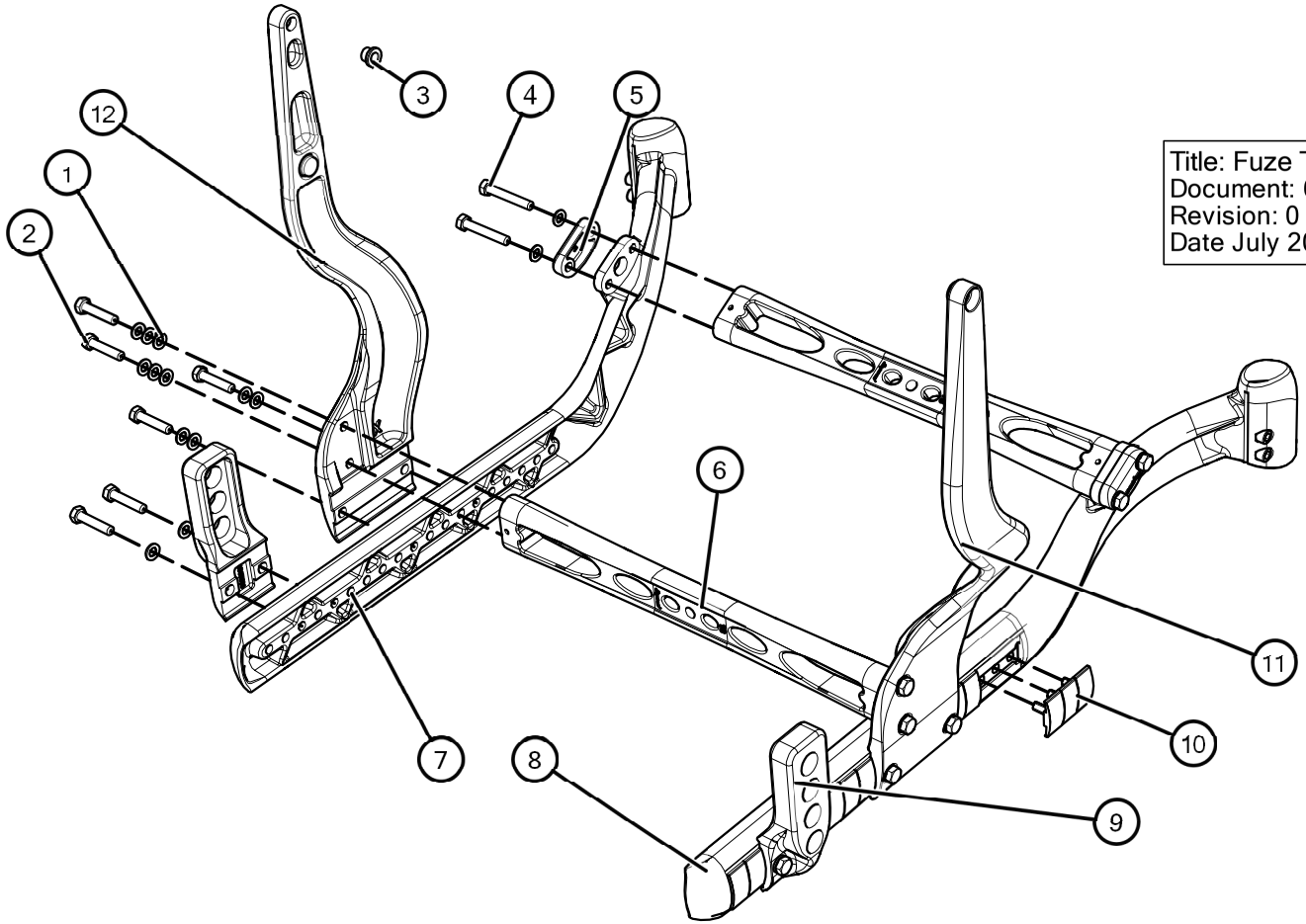

Title: Fuze T50 - Lower Frame w/ Fixed Crossbar Assembly
Document: 68107
Revision: 0
Date July 2015

BOM ID	Description	Qty	PartNo
1	0.32 ID 0.562 OD .057"-.069" Thk Washer	28	10606
2	5/16" - 18 x 1 1/2" Hex Head Bolt	12	13394
3	5/16" ID x 7/16" OD x 3/8" Long Oil Lite Bushing - Flanged	2	1863
4	5/16" - 18 x 2" Hex Head Bolt	4	13396
5	Lower Frame Crossbar Cap	2	6530
6	Fuze Crossbar - Forged	2	Pick Size
6.1	Fuze Crossbar - Forged - 15"	2	7805
6.2	Fuze Crossbar - Forged - 16"	2	6527
6.3	Fuze Crossbar - Forged - 17"	2	7806
6.4	Fuze Crossbar - Forged -18"	2	6528
6.5	Fuze Crossbar - Forged - 19"	2	7807
6.6	Fuze Crossbar - Forged - 20"	2	6529
7	Fuze Lower Frame - One-Piece - LH	1	Pick Color
7.1	Fuze Lower Frame - One-Piece - LH - Black	1	7181
7.2	Fuze Lower Frame - One-Piece - LH - Blue	1	7179
7.3	Fuze Lower Frame - One-Piece - LH - Orange	1	7183

BOM ID	Description	Qty	PartNo
7.4	Fuze Lower Frame - One-Piece - LH - Red	1	7176
7.5	Fuze Lower Frame - One-Piece - LH - Green	1	7185
7.6	Fuze Lower Frame - One-Piece - LH - Purple	1	7187
8	Fuze Lower Frame - One-Piece - RH	1	Pick Color
8.1	Fuze Lower Frame - One-Piece - RH - Black	1	7180
8.2	Fuze Lower Frame - One-Piece - RH - Blue	1	7178
8.3	Fuze Lower Frame - One-Piece - RH - Orange	1	7182
8.4	Fuze Lower Frame - One-Piece - RH - Red	1	7177
8.5	Fuze Lower Frame - One-Piece - RH - Green	1	7184
8.6	Fuze Lower Frame - One-Piece - RH - Purple	1	7186
9	Fuze T50 Axle Plate - 3 Position	2	7043
10	Masking Cap	22	4776
11	LF Pivot Arm - RH	1	7851
12	LF Pivot Arm - LH	1	7852

BOM ID	Description	Qty	PartNo
1	Fuze Mechlok Assembly with SLS	1	4729
2	5/16" ID x 11/16" OD Washer - Black Zinc	3	1428
3	1/4-20 Nylon Locknut - Thick - Black Zinc	1	1390
4	3/8-16 Nylon Locknut - Thin - Black Zinc	1	3530
5	3/8" ID, 7/8" OD, 1/16 thick washer	1	13351
6	3/8-16 x 1-1/2 Hex Head Bolt	1	5486
7	5/16-18 (2B) Nylon Locknut - Thick - Black Zinc	1	1389
8	ML Center Pin for RAM	1	7551
9	Snap Lock for RAM	1	7404
10	Brkt- Rotation Allowance Mount (RAM)	1	6782
11	5/16 x 1-3/4" x 1/4-20 Socket Head Shoulder Bolt - Black Zinc	1	2187
12	Tilt Limiter	1	4808
Items 1-12	Fuze Rotation Allowance Mount (RAM) Assembly	1	6835

Title: Fuze T50 - MechLock Assembly
Document: 68312
Revision: 0
Date: November 2013

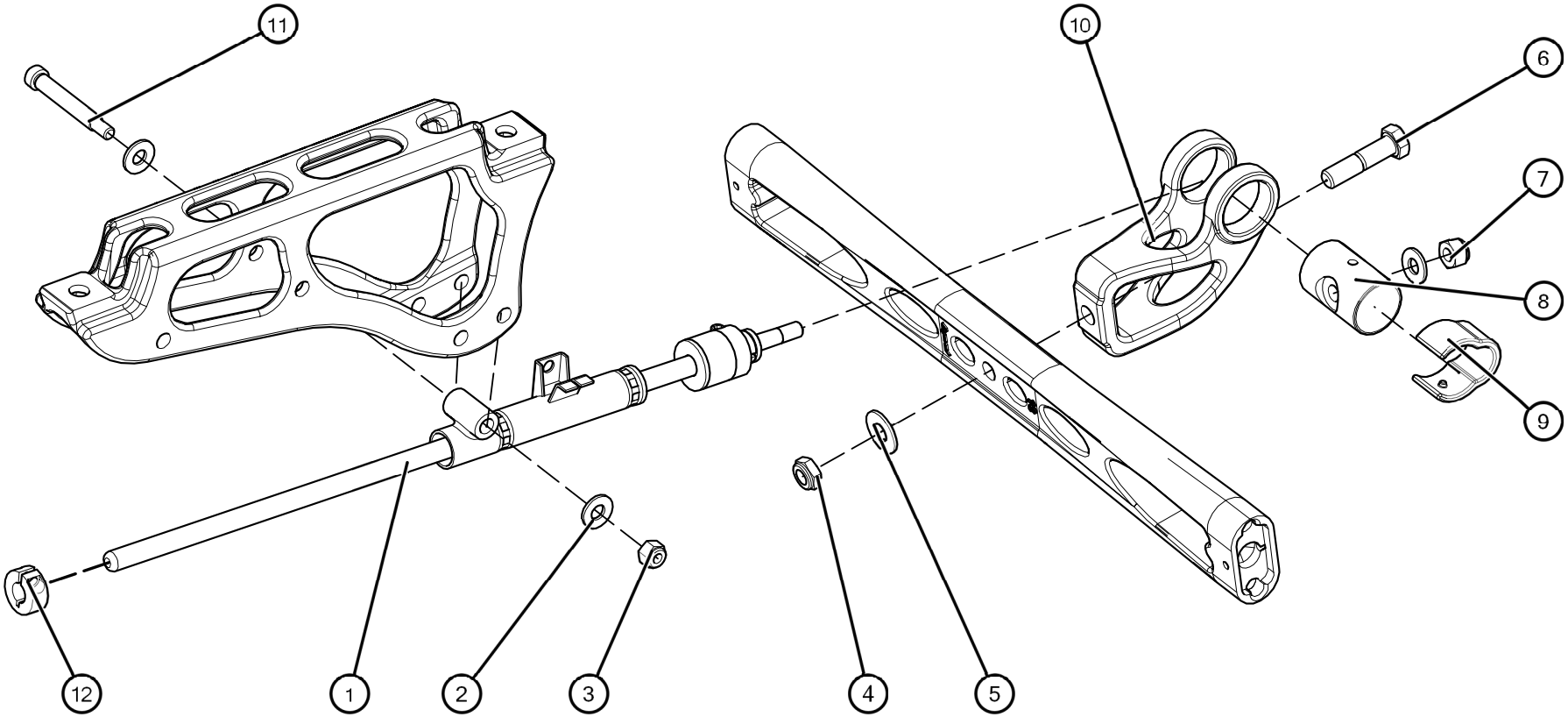

12	11	10	9	8	7	6	5	4	3	2	1

Title: Fuze T50 - Upper Frame w/ Fixed Crossbars & Tie Downs
Document: 68108
Revision: 0
Date: July 2015

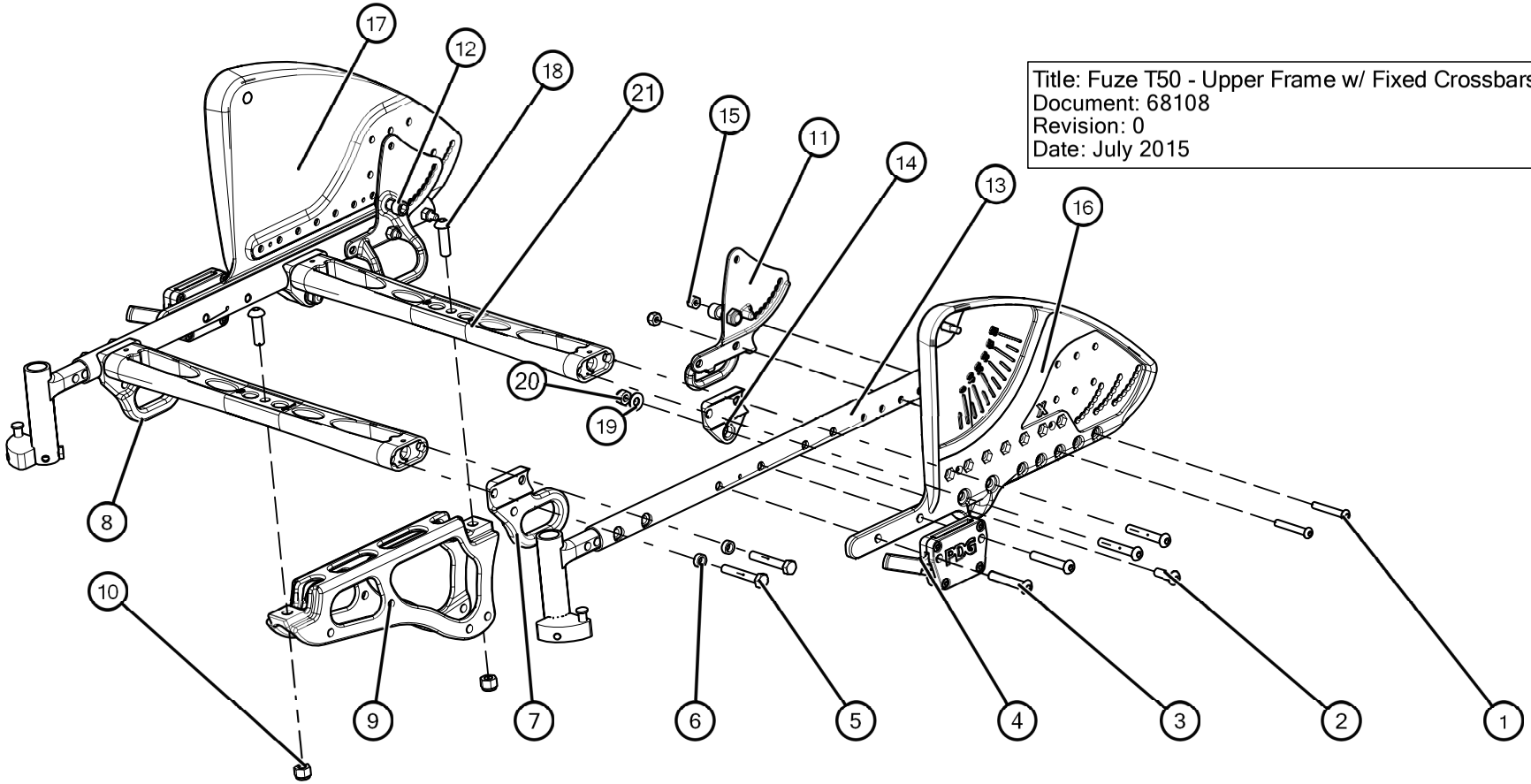

BOM ID	Description	Qty	PartNo
1	1/4-20x 1 3/4" Socket Button Head - Black Zinc	4	13392
2	5/16-18 x 1" Socket Button Head - Black Zinc	2	4717
3	5/16-18 x 2" Socket Button Head - Black Zinc	8	3674
4	T-Style Arm Base	2	4922
5	5/16" - 18 x 2" Hex Head Bolt	4	13395
6	0.32" ID 0.50" OD 0.19" Thick Spacer	4	10727
7	Upper Frame Tie Down Seating Block - LH	1	7895
8	Upper Frame Tie Down Seating Block - RH	1	7896
9	Strut Mount - Upper Frame	1	8180
10	3/8-16 Nylon Locknut - Thick - Black Zinc	2	3530
11	Back Plate with Tie Down - LH	1	5236
12	Back Plate with Tie Down - RH	1	5237
13	Fuze T50 Upper Frame Tube Subassembly	2	8165
14	Upper Frame Seating Block	2	6967

BOM ID	Description	Qty	PartNo
15	1/4-20 Nylon Locknut - Thick - Black Zinc	4	1390
16	UF Pivot Plate - LH	1	7556
17	UF Pivot Plate - RH	1	7557
18	3/8-16 x 1 1/4" Socket Button Head - Black Zinc	2	4716
19	5/16" ID x 11/16" OD Washer - Black Zinc	2	13350
20	5/16-18 Nylon Locknut - Thick - Black Zinc	2	1389
21	Fuze Crossbar - Forged	2	Pick Size
21.1	Fuze Crossbar - Forged - 15"	2	7805
21.2	Fuze Crossbar - Forged - 16"	2	6527
21.3	Fuze Crossbar - Forged - 17"	2	7806
21.4	Fuze Crossbar - Forged -18"	2	6528
21.5	Fuze Crossbar - Forged - 19"	2	7807
21.6	Fuze Crossbar - Forged - 20"	2	6529

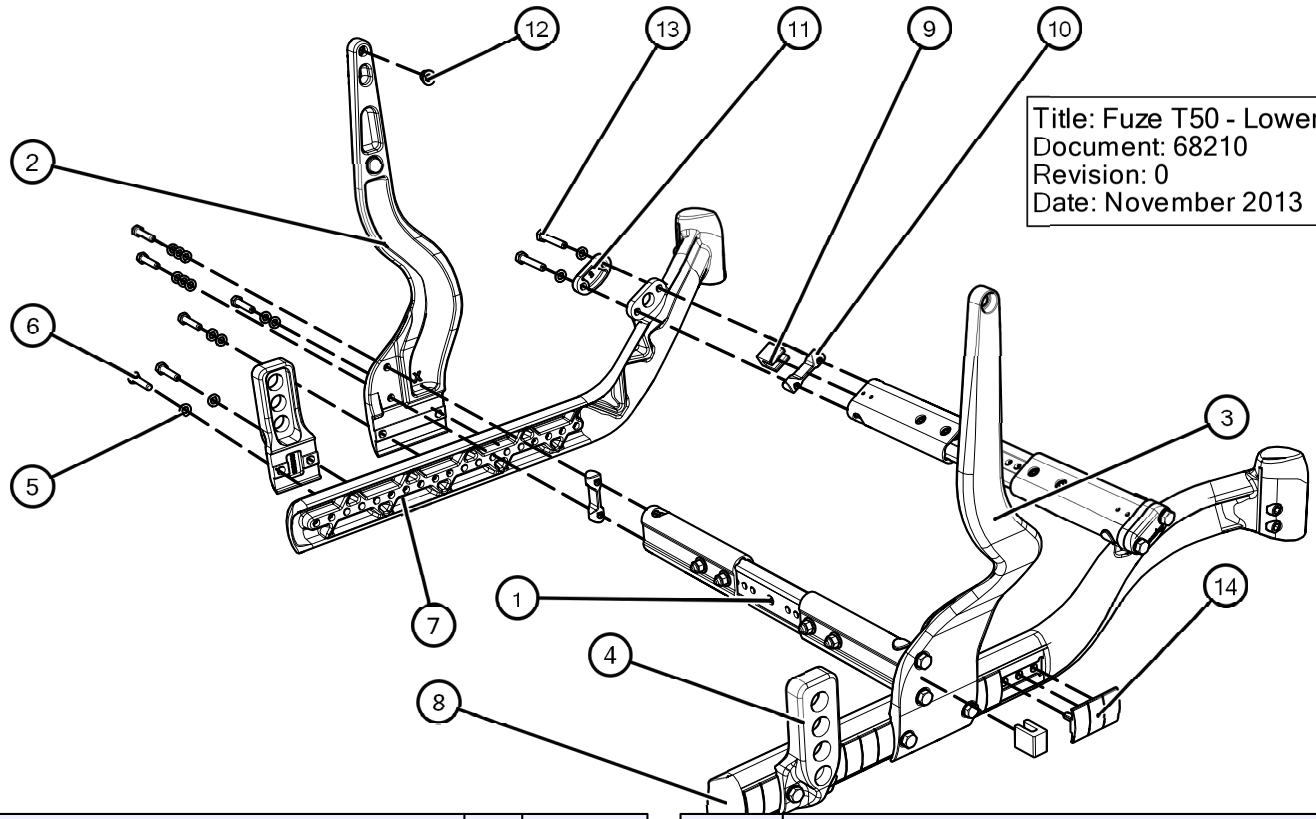

Title: Fuze T50 - Lower Frame W/ Adj. Crossbar
Document: 68210
Revision: 0
Date: November 2013

BOM ID	Description	Qty	PartNo
1	Crossbar Assembly	2	Pick Size
1.1	Crossbar Assembly - 12"w - 15"w	2	7308
1.2	Crossbar Assembly - 15"w - 20"w	2	7309
2	LF Pivot Arm - [LH/RH]	1	7852
3	LF Pivot Arm - [RH/LH]	1	7851
4	Axle Plate - 3 Position	2	7043
5	0.32 ID 0.562 OD .057"-.069" Thk Washer	28	10606
6	5/16" - 18 x 1 1/2" Hex Head Bolt	12	10249
7	Fuze Lower Frame - One-Piece (LH/RH)	1	Pick Color
7.1	Fuze Lower Frame - One-Piece (LH/RH) - Black	1	7181
7.2	Fuze Lower Frame - One-Piece (LH/RH) - Blue	1	7179
7.3	Fuze Lower Frame - One-Piece (LH/RH) - Green	1	7185
7.4	Fuze Lower Frame - One-Piece (LH/RH) - Red	1	7176
7.5	Fuze Lower Frame - One-Piece (LH/RH) - Orange	1	7183
7.6	Fuze Lower Frame - One-Piece (LH/RH) - Purple	1	7187

BOM ID	Description	Qty	PartNo
8	Fuze Lower Frame - One-Piece (RH/LH)	1	Pick Color
8.1	Fuze Lower Frame - One-Piece (RH/LH) - Black	1	7180
8.2	Fuze Lower Frame - One-Piece (RH/LH) - Blue	1	7178
8.3	Fuze Lower Frame - One-Piece (RH/LH) - Green	1	7184
8.4	Fuze Lower Frame - One-Piece (RH/LH) - Red	1	7177
8.5	Fuze Lower Frame - One-Piece (RH/LH) - orange	1	7182
8.6	Fuze Lower Frame - One-Piece (RH/LH) - Purple	1	7186
9	Fuze Crossbar Insert Saddle - Lower Frame	4	10253
10	Crossbar - Mounting Insert	4	7408
11	Lower Frame Crossbar Cap	2	6530
12	5/16" ID x 7/16" OD x 3/8" Long Oil Lite Bushing - Flanged	2	1863
13	5/16" - 18 x1 3/4" Hex Head Bolt	4	10643
14	Masking Cap	22	4776

Title: Fuze T50 - Upper Frame W/ Adj. Crossbar & Tie Downs
Document: 68211
Revision: 0
Date: November 2013

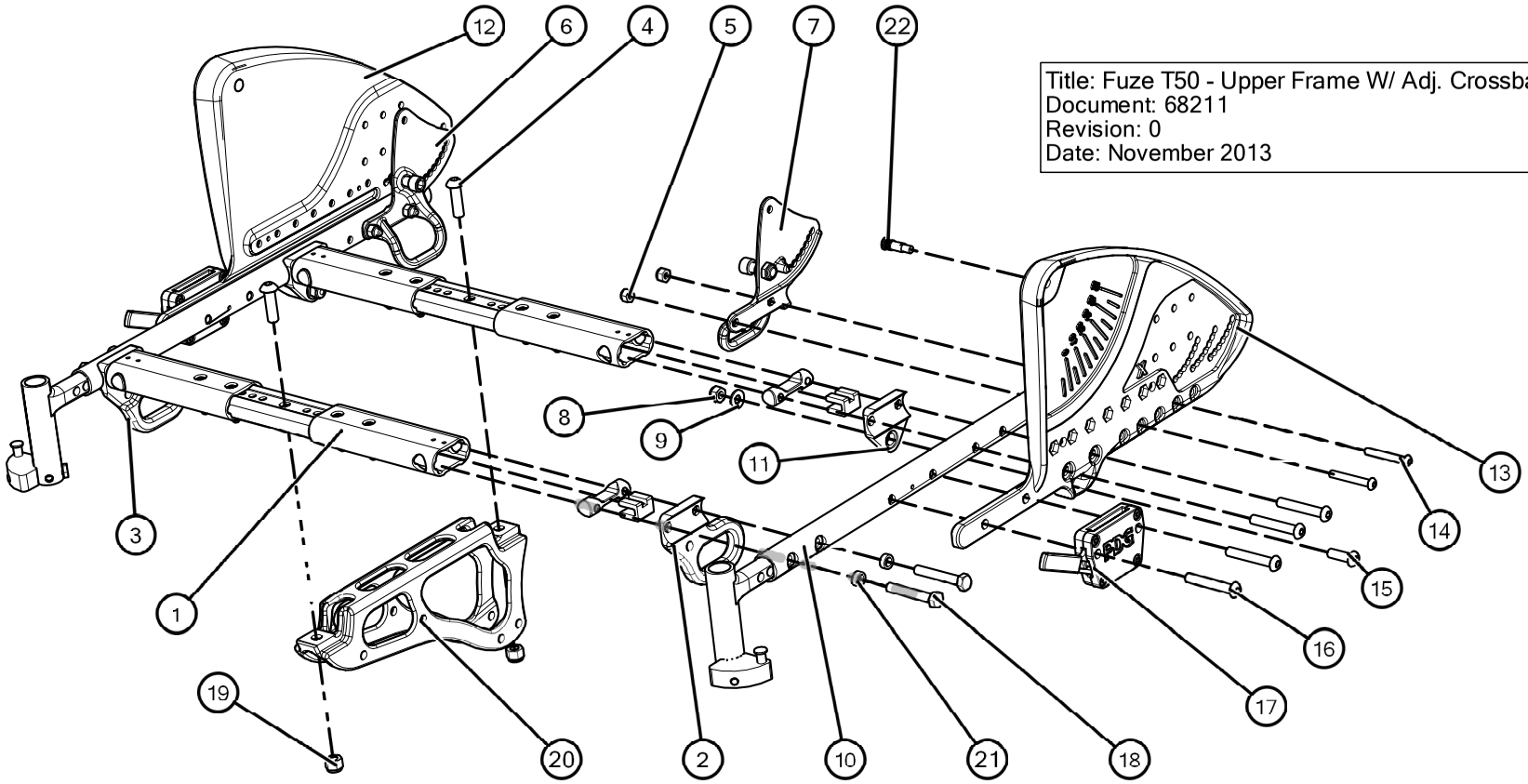

BOM ID	Description	Qty	PartNo
1	Crossbar Assembly	2	Pick Size
1.1	Crossbar Assembly - 12"w - 15"w	2	7308
1.2	Crossbar Assembly - 15"w -20"w	2	7309
2	Upper Frame Tie Down Seating Block - [LH/RH]	1	7896
3	Upper Frame Tie Down Seating Block - [RH/LH]	1	7895
4	3/8-16 x 1.25" Socket Button Head - Black Zinc	2	4716
5	1/4-20 Nylon Locknut - Thick - Black Zinc	4	1390
6	Back Plate with Tie Down - [LH/RH]	1	5236
7	Back Plate with Tie Down - [RH/LH]	1	5237
8	5/16-18 (2B) Nylon Locknut - Thick - Black Zinc	2	1389
9	5/16" ID x 11/16" OD Washer - Black Zinc	2	1428
10	Seat Rail	2	6140
11	Upper Frame Seating Block	2	6967

BOM ID	Description	Qty	PartNo
12	UF Pivot Plate - [RH/LH]	1	7557
13	UF Pivot Plate - [LH/RH]	1	7556
14	1/4-20x 1 3/4" Socket Button Head - Black Zinc	4	2685
15	5/16-18 x 1" Socket Button Head - Black Zinc	2	4717
16	5/16-18x2" Socket Button Head - Black Zinc	4	3674
17	T-Style Arm Base	2	4922
18	5/16" - 18 x 2" Hex Head Bolt	4	10250
19	3/8-16 Nylon Locknut - Thick - Black Zinc	2	3530
20	Strut Mount - Upper Frame	1	8180
21	0.32" ID 0.50" OD 0.19" Thick Spacer	4	10940
22	Pivot Pin	2	4667

Title: Fuze T50 - Upper Frame W/ Adj. Crossbar
Document: 68211
Revision: 0
Date: November 2013

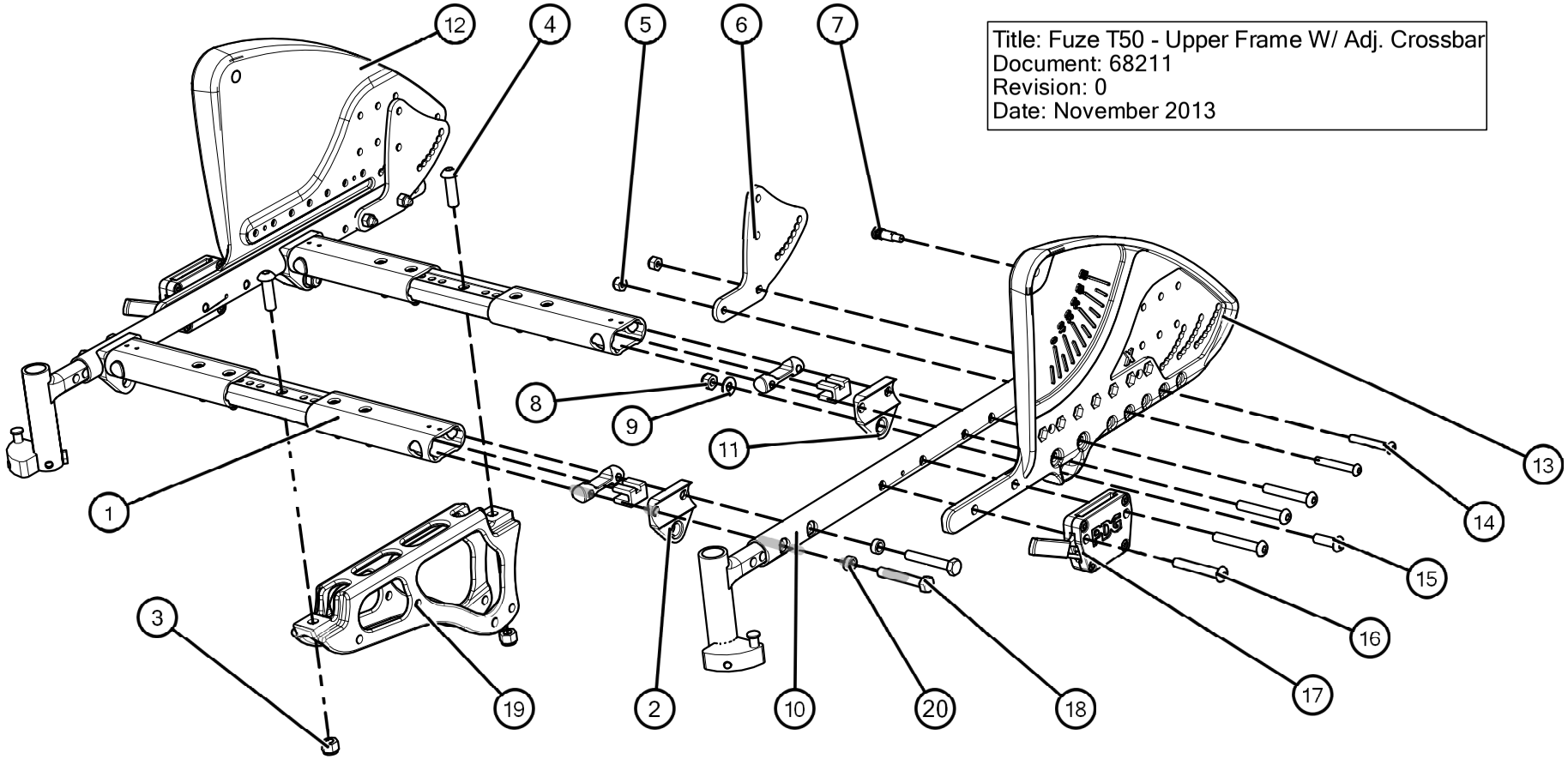

BOM ID	Description	Qty	PartNo
1	Crossbar Assembly	2	Pick Size
1.1	Crossbar Assembly - 12"w - 15"w	2	7308
1.2	Crossbar Assembly - 15"w -20"w	2	7309
2	Upper Frame Seating Block	2	6967
3	3/8-16 Nylon Locknut - Thick - Black Zinc	2	3530
4	3/8-16 x 1.25" Socket Button Head - Black Zinc	2	4716
5	1/4-20 Nylon Locknut - Thick - Black Zinc	4	1390
6	Back Plate	2	5659
7	Pivot Pin	2	4667
8	5/16-18 (2B) Nylon Locknut - Thick - Black Zinc	2	1389
9	5/16" ID x 11/16" OD Washer - Black Zinc	2	1428
10	Seat Rail	2	6140

BOM ID	Description	Qty	PartNo
11	Upper Frame Seating Block	2	6967
12	UF Pivot Plate - [RH/LH]	1	7557
13	UF Pivot Plate - [LH/RH]	1	7556
14	1/4-20x 1 3/4" Socket Button Head - Black Zinc	4	2685
15	5/16-18 x 1" Socket Button Head - Black Zinc	2	4717
16	5/16-18x2" Socket Button Head - Black Zinc	4	3674
17	T-Style Arm Base	2	4922
18	5/16" - 18 x 2" Hex Head Bolt	4	10250
19	Strut Mount - Upper Frame	1	8180
20	0.32" ID 0.50" OD 0.19" Thick Spacer	4	10940

Rev	Revision description	ECO#
8	Change of leg rest hanger hole location for different seat heights	1486

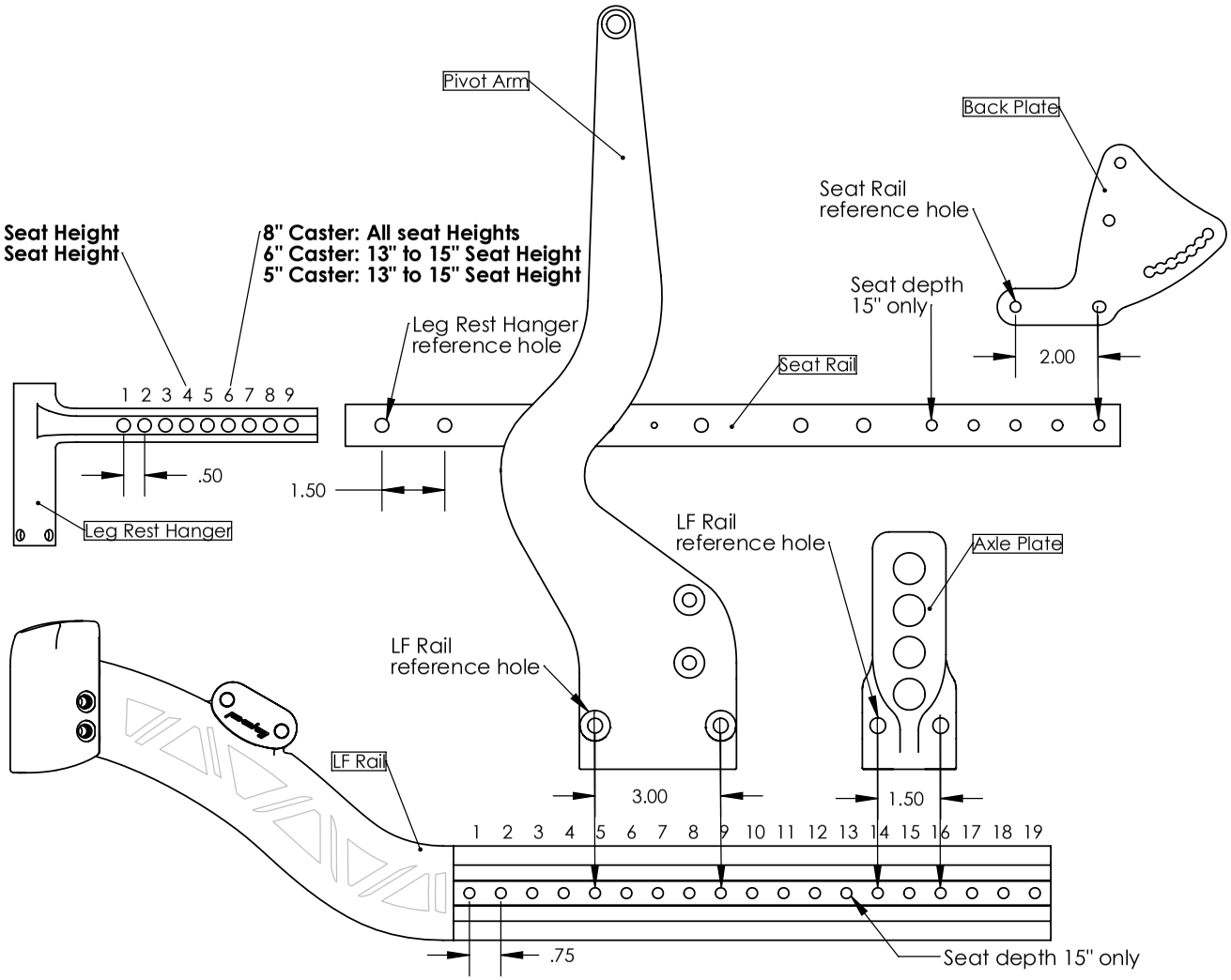

Align the relevant reference hole with the matching indexed hole as per chair set up table.

Dimensioning and Tolerancing Standard ASME Y14.5-2009

PDG part number	Author	Technical reference	Revised by	Approved by
NA	Dana Zhu	Rommel Tejeda	JF	Torr Brown

	Title:	File name (Drawing #)	Status
pdq®	Fuze T50 Upper and Lower Frame Configuration	85013	NA

© 2010 The information contained in this drawing is the sole property of PDG Mobility

Third angle projection	Tolerances unless otherwise stated:	Units	Sheet	Date of Issue	Revision
	Angular: +/- 1° Other x +/-0.8, x.x+/-0.4, x.xx+/-0.15	in	1 of 1	2015 Jul 09	8

Seat Height Table – Fuze T50 (and Narrow Fuze T20)

Rear Wheel	SEAT HEIGHT 5" Fork / 5" Casters		
		13"	14"
12"		AP(2)	AP(3)
		CJ-S	CJ-S
		CFP(1)	CFP(2)
		SD(0.5")	SD(0.5")

	14"	15"	16"
16"	AP(1)	AP(2)	AP(3)
	CJ-M	CJ-M	CJ-M
	CFP(1)	CFP(2)	CFP(2)
	SD(1.5")	SD(1.5")	SD(2.5")

	16"	17"
20"	AP(1)	AP(2)
	CJ-L	CJ-L
	CFP(1)	CFP(2)
	SD(3.5")	SD(3.5")

	17"
22"	AP(1)
	CJ-L
	CFP(2)
	SD(3.5")

Rear Wheel	SEAT HEIGHT 6" Fork / 6" Casters		
			14"
12"			AP(3)
			CJ-S
			CFP(1)
			SD(0.5")

			18"
12" (INVERTED AXLE PLATE)			AP(3)
			CJ-L
			CFP(2)
			SD(2.828")

	14"	15"	16"
16"	AP(1)	AP(2)	AP(3)
	CJ-S	CJ-S	CJ-S
	CFP(1)	CFP(2)	CFP(2)
	SD(0.5")	SD(0.5")	SD(1.5")

	16"	17"	18"
20"	AP(1)	AP(2)	AP(3)
	CJ-L	CJ-L	CJ-L
	CFP(1)	CFP(2)	CFP(2)
	SD(2.5")	SD(2.5")	SD(3.5")

	17"	18"
22"	AP(1)	AP(2)
	CJ-L	CJ-L
	CFP(2)	CFP(2)
	SD(2.5")	SD(3.5")

	18"
24"	AP(1)
	CJ-L
	CFP(2)
	SD(3.5")

Rear Wheel	SEAT HEIGHT 8" Fork / 6" Casters		
		18"	19"
12" (INVERTED AXLE PLATE)		AP(3)	AP(2)
		CJ-L	CJ-L
		CFP(1)	CFP(2)
		SD(2.653")	SD(2.828")

	15"	16"
16"	AP(2)	AP(3)
	CJ-S	CJ-S
	CFP(1)	CFP(2)
	SD(0.375")	SD(0.375")

	16"	17"	18"
20"	AP(1)	AP(2)	AP(3)
	CJ-M	CJ-M	CJ-M
	CFP(1)	CFP(2)	CFP(2)
	SD(1.375")	SD(1.375")	SD(2.375")

	17"	18"	19"
22"	AP(1)	AP(2)	AP(3)
	CJ-L	CJ-L	CJ-L
	CFP(1)	CFP(2)	CFP(2)
	SD(2.375")	SD(2.375")	SD(3.375")

	18"	19"
24"	AP(1)	AP(2)
	CJ-L	CJ-L
	CFP(2)	CFP(2)
	SD(2.375")	SD(3.375")

Rear Wheel	SEAT HEIGHT 8" Fork / 8" Casters (ALL VARIETIES)		
	18"	19"	20"
12" (INVERTED AXLE PLATE)	AP(3)	AP(2)	AP(1)
	CJ-M	CJ-L	CJ-L
	CFP(1)	CFP(1)	CFP(2)
	SD(1.637")	SD(2.637")	SD(2.637")

			20"
16" (INVERTED AXLE PLATE)			AP(3)
			CJ-L
			CFP(2)
			SD(2.637")

			16"
16"			AP(3)
			CJ-S
			CFP(1)
			SD(0.375")

	16"	17"	18"
20"	AP(1)	AP(2)	AP(3)
	CJ-S	CJ-S	CJ-S
	CFP(1)	CFP(2)	CFP(2)
	SD(0.375")	SD(0.375")	SD(1.375")

	17"	18"	19"
22"	AP(1)	AP(2)	AP(3)
	CJ-M	CJ-M	CJ-M
	CFP(1)	CFP(2)	CFP(2)
	SD(1.375")	SD(1.375")	SD(2.375")

	18"	19'	20"
24"	AP(1)	AP(2)	AP(3)
	CJ-L	CJ-L	CJ-L
	CFP(1)	CFP(2)	CFP(2)
	SD(2.375")	SD(2.375")	SD(3.375")

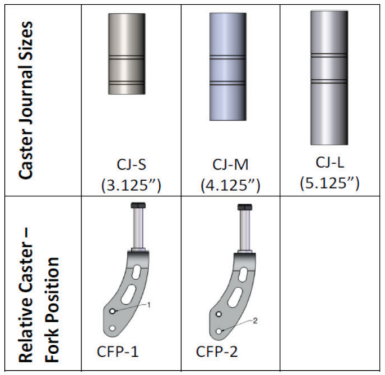

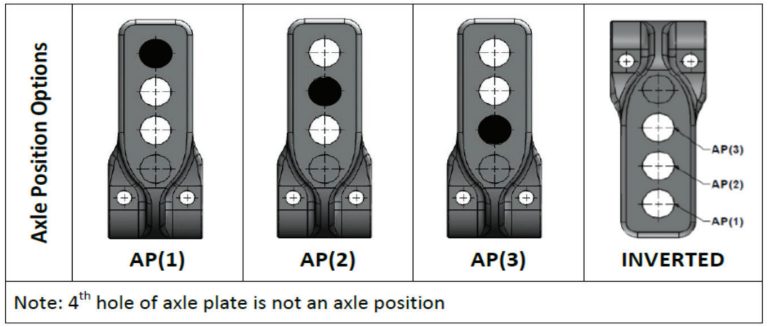

Relative caster fork position (CFP) and setup distance (SD) illustration

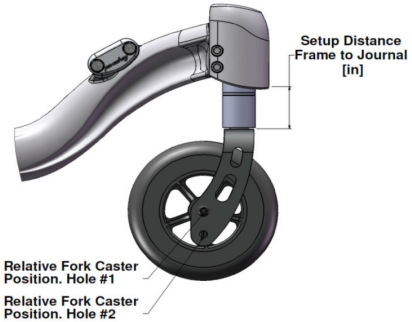

Rev.	Revision description:				ECO #
04	Updated pictures to current, addition of inverted axle plate positions, collapsed 8" Wide Fork/ 8x 2" casters configurations and included them under 8" Fork/8" Casters (All varieties).				1335
Approved by: TB	Revised by: BA	Filename (Drawing #):	85017	Date of Issue: Jan 21st 2013	
				Sheet	1 of 2

File : 85036 R: 0 Printed: Monday, February 13, 2012 Created: Monday, July 27, 2009 9:07:30 AM Saved: Monday, February 13, 2012 2:15:07 PM By: dzhu Checked Date: 2012/02/13

Rev	Revision description	ECO#
0	Initial Release	1280

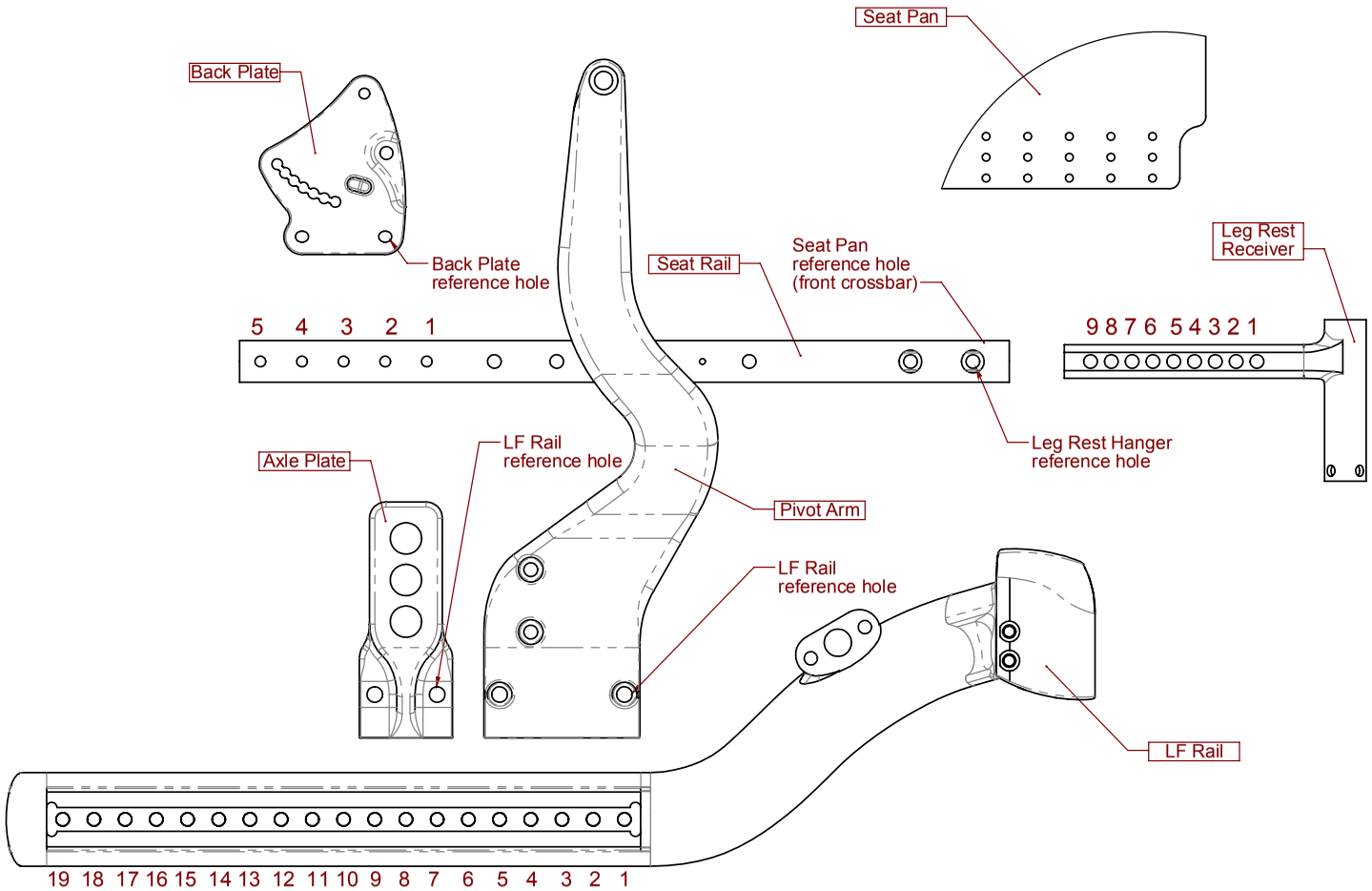

Align the relevant reference hole with matching indexed hole as per chair setup table.

Dimensioning and Tolerancing Standard ASME Y14.5-2009

PDG part number	Author	Technical reference	Revised by	Approved by
NA	DZ	MJ	NA	TB

pdq®

© 2010 The information contained in this drawing is the sole property of PDG Mobility

Title: Fuze Junior T50 Upper and Lower Frame Configuration

File name (Drawing #): 85036

Status: NA

Third angle projection

Tolerances unless otherwise stated:
Angular: +/- 1°
Other x +/-0.8, x.x+/-0.4, x.xx+/-0.15

Units

Sheet 1 of 1

Date of Issue: 2012/02/13

Revision: 0

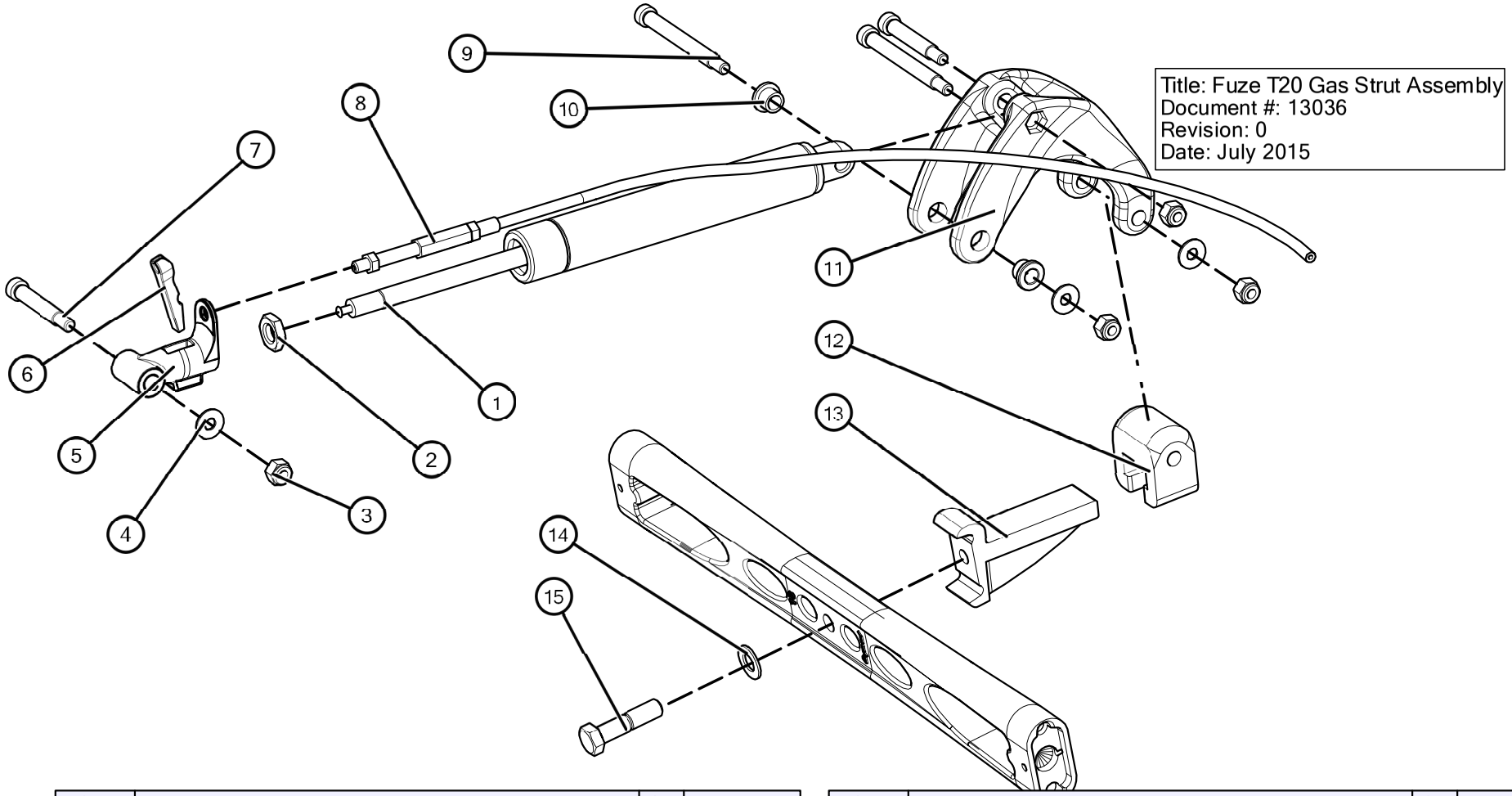

BOM ID	Description	Qty	PartNo
1	Gas Strut - Damped Rigid Locking 12.20" extended	1	Select Force
1.1	Gas Strut - Damped Rigid Locking (600N)	1	7310
1.2	Gas Strut - Damped Rigid Locking (1000N)	1	7311
1.3	Gas Strut - Damped Rigid Locking (1200N)	1	7312
2	M10x1 Gas Strut Nut	1	2060
3	1/4-20 Nylon Locknut - Thick - Black Zinc	3	1390
4	1/4" ID x 5/8" OD x 3/64" Washer - Steel - Black Zinc	3	1425
5	Strut Activator - Block	1	5230
6	Strut Activator - Lever	1	5231
7	5/16" x 1 1/2" x 1/4-20 Socket Head Shoulder Bolt - Black Zinc	2	5462

BOM ID	Description	Qty	PartNo
8	Tilt Cables - Single Trigger 49" - Astrotilt/Fuze	1	9397
9	5/16" x 2 1/2" x 1/4-20 Socket Head Shoulder Bolt - Black Zinc	2	2617
10	5/16" ID x 7/16" OD x 3/8" Long Oil Lite Bushing - Flanged	2	1863
11	Strut Link	1	7580
12	Slider Block - Lower Frame Strut Mount	1	7863
13	Slider Rail - Lower Frame Strut Mount	1	5233
14	3/8" ID x 3/4" OD x 3/64" Washer Steel Black	1	13351
15	3/8-16 x 1-1/2 Hex Head Bolt	1	5486

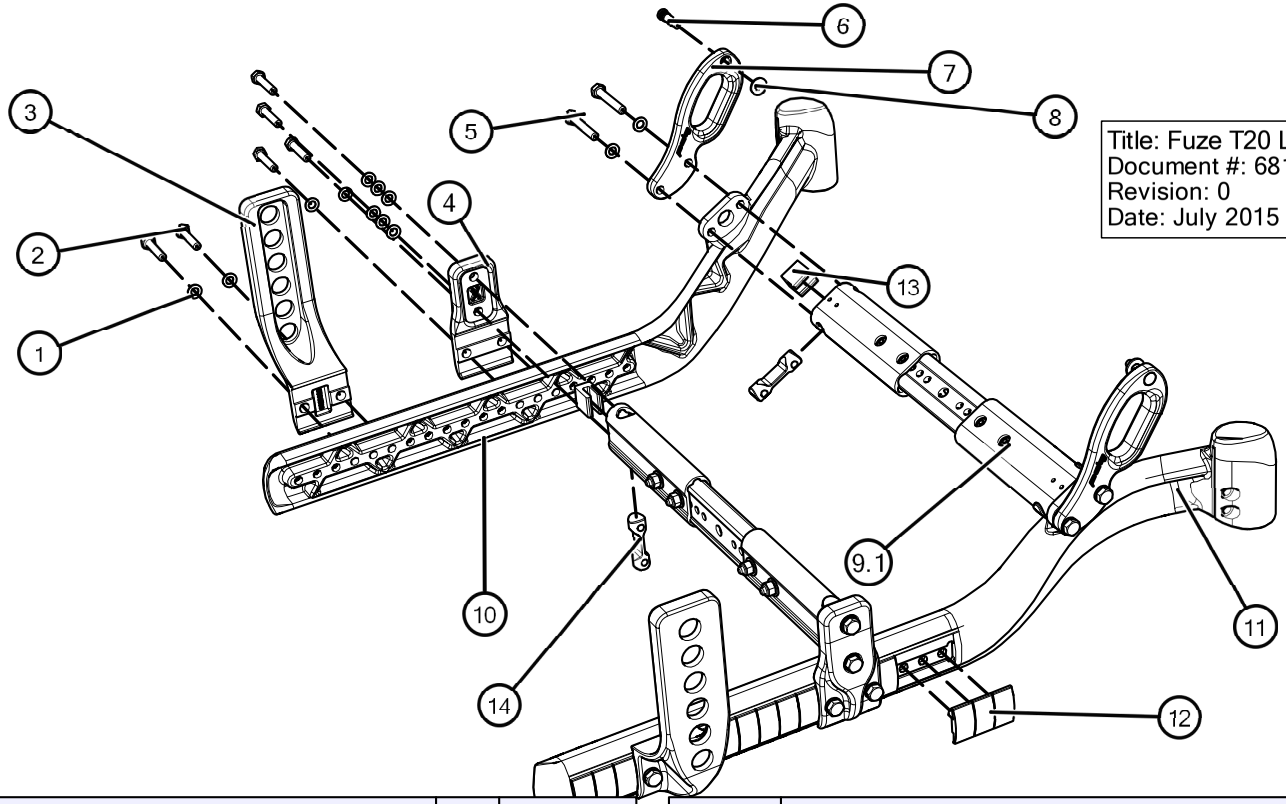

Title: Fuze T20 Lower Frame W/ Adj. Crossbar
Document #: 68104
Revision: 0
Date: July 2015

BOM ID	Description	Qty	PartNo
1	0.32 ID 0.562 OD .057"-.069" Thk Washer	24	10606
2	5/16" - 18 x 1 1/2" Hex Head Bolt	12	10249
3	Axle Plate - 5 Position	2	16799
4	Back Crossbar Plate	2	16800
5	5/16" - 18 x 2" Hex Head Bolt	4	13389
6	Pivot Pin-Long (T20)	2	16799
7	Front Pivot Mounting Bracket	2	5229
8	Washer D-shape for 5/16" OD Pin	2	4641
9	Crossbar Assembly	2	7309
9.1	Crossbar Assembly - 12"w - 15"w	2	7308
9.2	Crossbar Assembly - 15"w - 20"w	2	7309
10	Fuze Lower Frame - One-Piece (LH/RH)	1	Pick Color
10.1	Fuze Lower Frame - One-Piece (LH/RH) - Black	1	7181
10.2	Fuze Lower Frame - One Piece (LH/RH) - Blue	1	7179
10.3	Fuze Lower Frame - One-Piece (LH/RH) - Green	1	7185

BOM ID	Description	Qty	PartNo
10.4	Fuze Lower Frame - One Piece (LH/RH) - Red	1	7176
10.5	Fuze Lower Frame - One-Piece (LH/RH) - Orange	1	7183
10.6	Fuze Lower Frame - One-Piece (LH/RH) - Purple	1	7187
11	Fuze Lower Frame - One-Piece (RH/LH)	1	Pick Color
11.1	Fuze Lower Frame - One-Piece (RH/LH) - Black	1	7180
11.2	Fuze Lower Frame - One-Piece (RH/LH) - Blue	1	7178
11.3	Fuze Lower Frame - One-Piece (RH/LH) - Green	1	7184
11.4	Fuze Lower Frame - One-Piece (RH/LH) - Red	1	7177
11.5	Fuze Lower Frame - One-Piece (RH/LH) - Orange	1	7182
11.6	Fuze Lower Frame - One-Piece (RH/LH) - Purple	1	7186
12	Masking Cap	26	4776
13	Fuze Crossbar Insert Saddle - Lower Frame	4	10253
14	Crossbar - Mounting Insert	14	7408

Title: Fuze T20 Lower Frame W/ fixed. Crossbar
Document #: 13112
Revision: 0
Date: July 2015

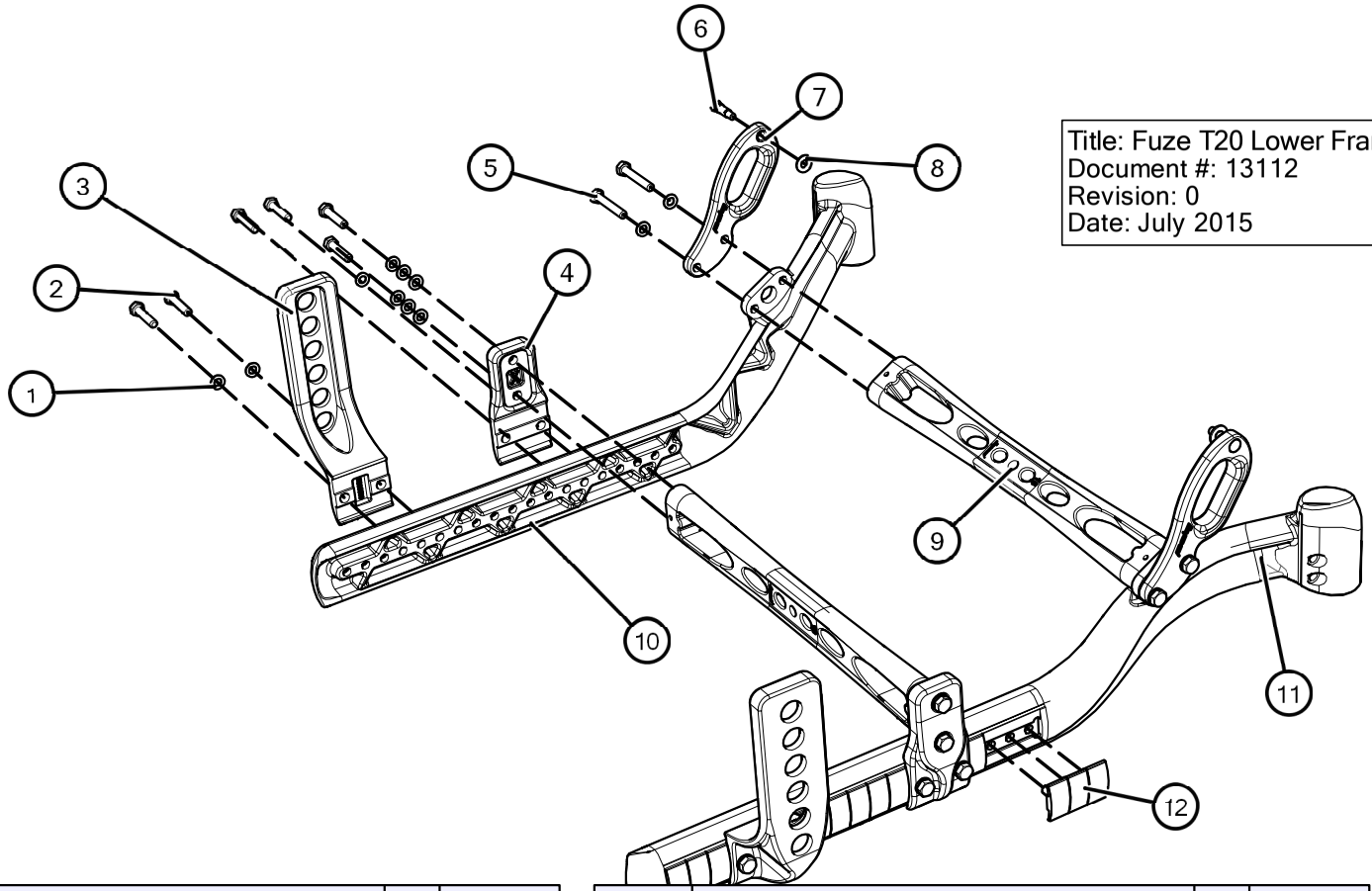

BOM ID	Description	Qty	PartNo
1	0.32 ID 0.562 OD .057"-.069" Thk Washer	24	10606
2	5/16" - 18 x 1 1/2" Hex Head Bolt	12	10249
3	Axle Plate - 5 Position	2	16799
4	Back Crossbar Plate	2	16800
5	5/16" - 18 x 2" Hex Head Bolt	4	13389
6	Pivot Pin-Long (T20)	2	16799
7	Front Pivot Mounting Bracket	2	5229
8	Washer D-shape for 5/16" OD Pin	2	4641
9	Fuze Crossbar - Forged	2	see table
9.1	Fuze Crossbar - Forged - 15"	2	7805
9.2	Fuze Crossbar - Forged - 16"	2	6527
9.3	Fuze Crossbar - Forged - 17"	2	7806
9.4	Fuze Crossbar - Forged - 18"	2	6528
9.5	Fuze Crossbar - Forged - 19"	2	7807
9.6	Fuze Crossbar - Forged - 20"	2	6529
10	Fuze Lower Frame - One-Piece (LH/RH)	1	Pick Color

BOM ID	Description	Qty	PartNo
10.1	Fuze Lower Frame - One-Piece (LH/RH) - Black	1	7181
10.2	Fuze Lower Frame - One Piece (LH/RH) - Blue	1	7179
10.3	Fuze Lower Frame - One-Piece (LH/RH) - Green	1	7185
10.4	Fuze Lower Frame - One Piece (LH/RH) - Red	1	7176
10.5	Fuze Lower Frame - One-Piece (LH/RH) - Orange	1	7183
10.6	Fuze Lower Frame - One-Piece (LH/RH) - Purple	1	7187
11	Fuze Lower Frame - One-Piece (RH/LH)	1	Pick Color
11.1	Fuze Lower Frame - One-Piece (RH/LH) - Black	1	7180
11.2	Fuze Lower Frame - One-Piece (RH/LH) - Blue	1	7178
11.3	Fuze Lower Frame - One-Piece (RH/LH) - Green	1	7184
11.4	Fuze Lower Frame - One-Piece (RH/LH) - Red	1	7177
11.5	Fuze Lower Frame - One-Piece (RH/LH) - Orange	1	7182
11.6	Fuze Lower Frame - One-Piece (RH/LH) - Purple	1	7186
12	Masking Cap	26	4776

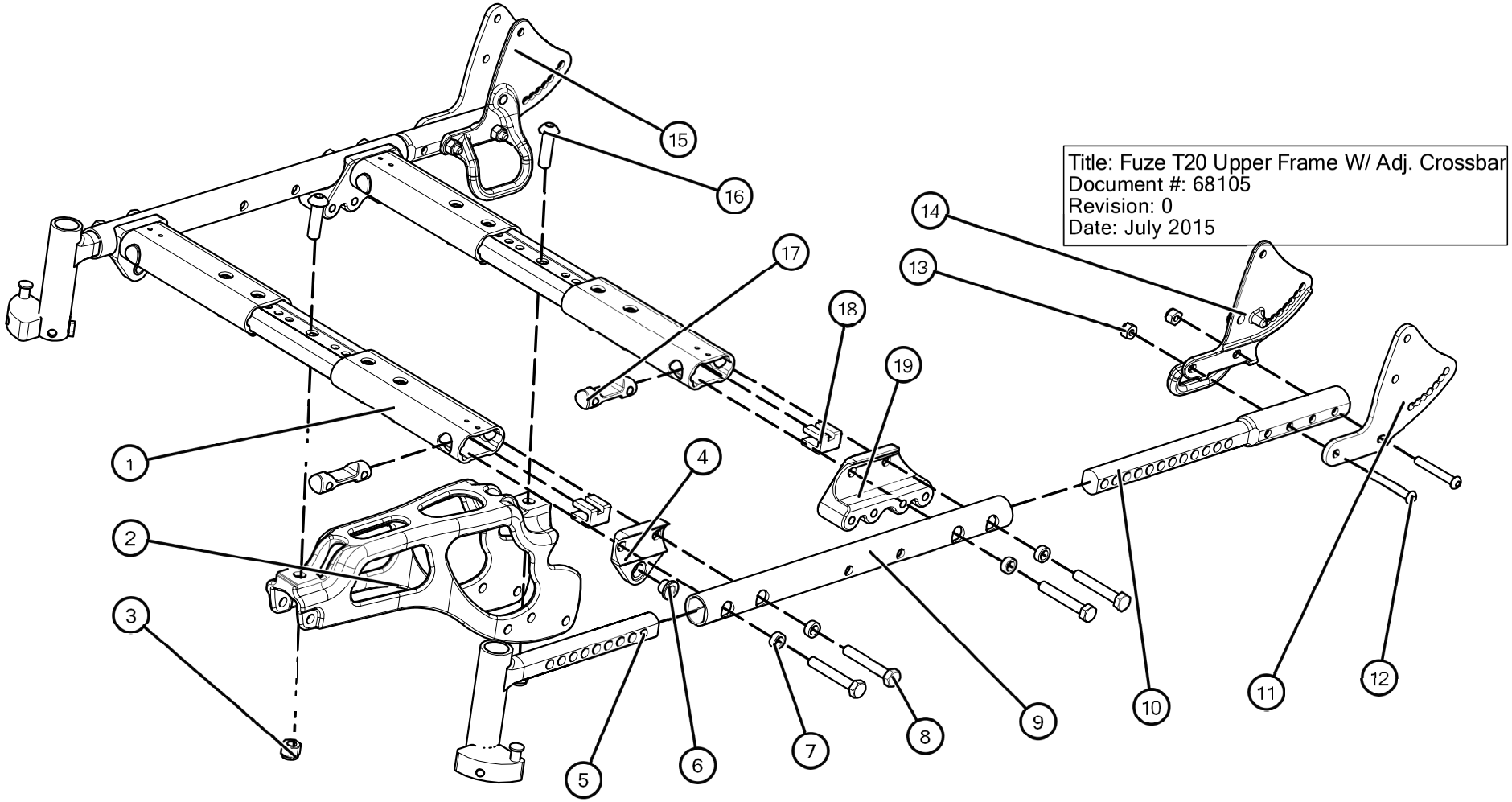

BOM ID	Description	Qty	PartNo
1	Crossbar Assembly	2	7309
1.1	Crossbar Assembly - 12"w - 15" w	2	7308
1.2	Crossbar Assembly - 15"w - 20"w	2	7308
2	Strut Mount - Upper Frame - Universal	1	5228
3	3/8-16 Nylon Locknut - Thick - Black Zinc	2	1393
4	Upper Frame Seating Block	2	4742
5	Integrated Front Rigging Receiver - Fuze	2	4637
6	5/16" ID x 7/16" OD x 3/8" Long Oil Lite Bushing - Flanged	2	1863
7	0.32" ID 0.50" OD 0.19" Thick Spacer	8	13395
8	5/16" - 18 x 2" Hex Head Bolt	8	5242
9	Seat Rail - Front Segment	2	10727

BOM ID	Description	Qty	PartNo
10	Seat Tube - Rear Segment	2	5241
11	Back Plate	2	5659
12	1/4-20x 1 3/4" Socket Button Head - Black Zinc	4	13392
13	1/4-20 Nylon Locknut - Thick - Black Zinc	4	1390
14	Back Plate with Tie Down - [RH/LH]	1	5237
15	Back Plate with Tie Down - [LH/RH]	1	5236
16	3/8-16 x 1.25" Socket Button Head - Black Zinc	2	3672
17	Crossbar - Mounting Insert	4	4739
18	Fuze Crossbar Insert Saddle - Upper Frame	4	10252
19	Upper Frame Mounting Block	2	6377

Title: Fuze T20 Upper Frame W/ Fixed Crossbar
Document #: 13114
Revision: 0
Date: July 2015

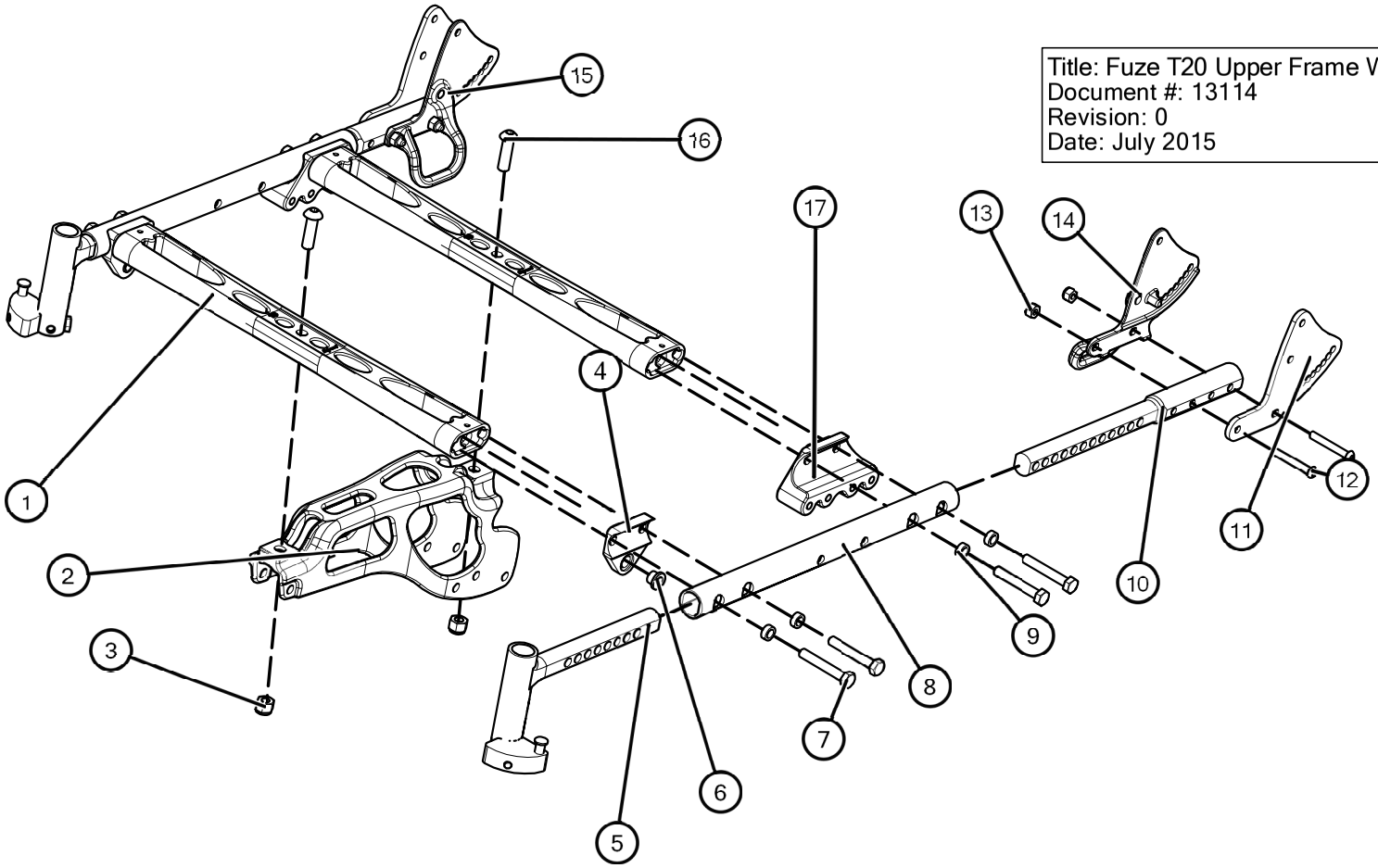

BOM ID	Description	Qty	PartNo
1	Fuze Crossbar - Forged	2	Select Size
1.1	Fuze Crossbar - Forged - 15"	2	7805
1.2	Fuze Crossbar - Forged - 16"	2	6527
1.3	Fuze Crossbar - Forged - 17"	2	7806
1.4	Fuze Crossbar - Forged - 18"	2	6528
1.5	Fuze Crossbar - Forged - 19"	2	7807
1.6	Fuze Crossbar - Forged - 20"	2	6529
2	Strut Mount - Upper Frame - Universal	1	5228
3	3/8-16 Nylon Locknut - Thick - Black Zinc	2	1393
4	Upper Frame Seating Block	2	4742
5	Integrated Front Rigging Receiver - Fuze	2	5097
6	5/16" ID x 7/16" OD x 3/8" Long Oil Lite Bushing - Flanged	2	1863

BOM ID	Description	Qty	PartNo
7	5/16" - 18 x 2" Hex Head Bolt	8	13395
8	Seat Rail - Front Segment	2	5242
9	0.32" ID 0.50" OD 0.19" Thick Spacer	8	10727
10	Seat Tube - Rear Segment	2	5241
11	Back Plate	2	5659
12	1/4-20x 1 3/4" Socket Button Head - Black Zinc	4	13392
13	1/4-20 Nylon Locknut - Thick - Black Zinc	4	1390
14	Back Plate with Tie Down - [RH/LH]	1	5236
15	Back Plate with Tie Down - [LH/RH]	1	5237
16	3/8-16 x 1.25" Socket Button Head - Black Zinc	2	3672
17	Upper Frame Mounting Block	2	6377

Rev	Revision description	ECO#
1	Added information for 21" and 22" Seat Depths	1526

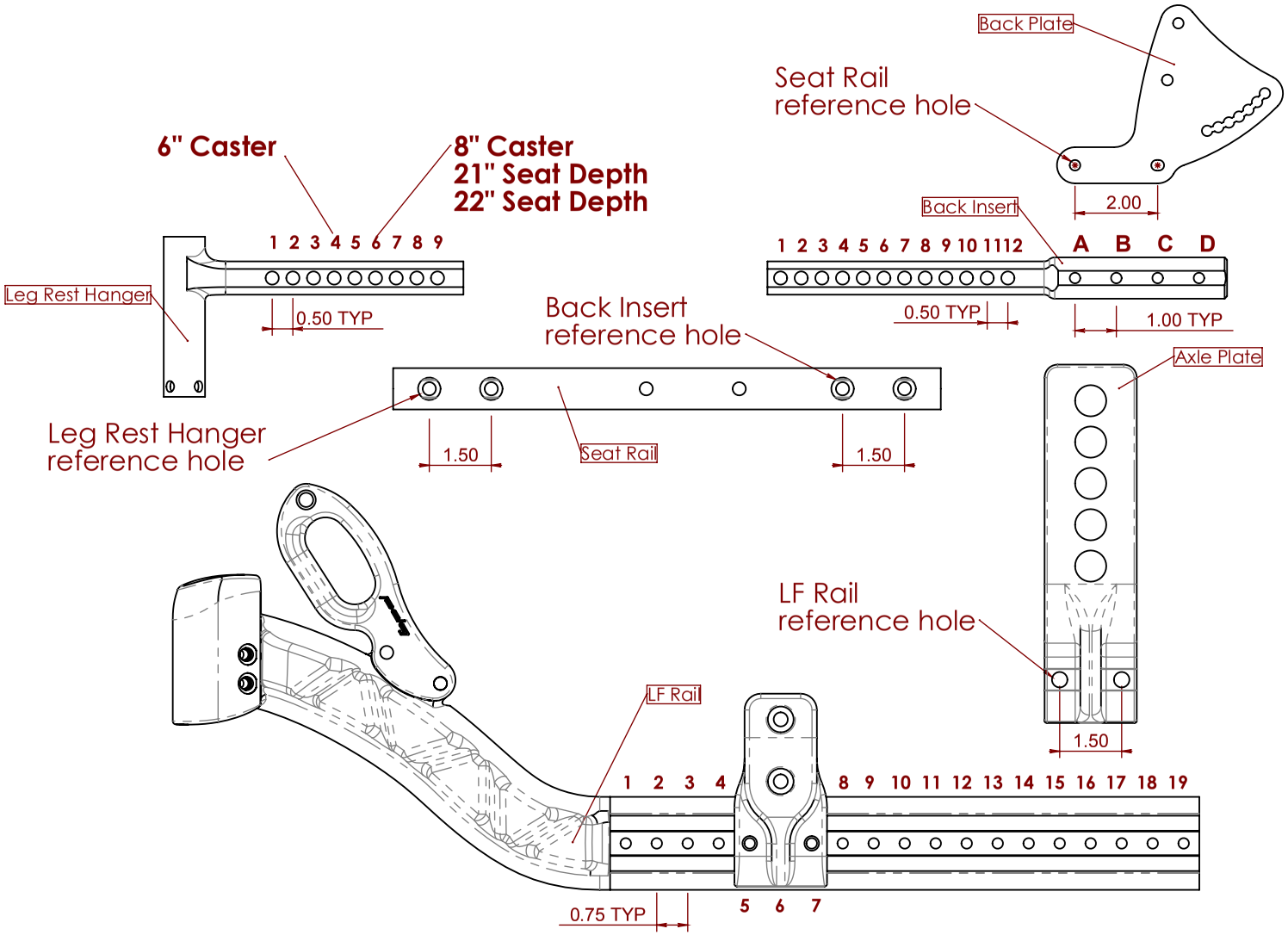

Hole Location

Seat Depth	Axle Plate	Back Insert	Back Plate
15"	9	9	A
16"	10	9	B
17"	11	7	B
18"	12	5	B
19"	13	3	B
20"- 22"	14	1	B

Align the relevant reference hole with matching indexed hole as per chair setup table.

Dimensioning and Tolerancing Standard ASME Y14.5-2009

PDG part number	Author	Technical reference	Revised by	Approved by
NA	Jim Formby	Mike Jalmarson	Jim Formby	Torr Brown

Title: Fuze T20 Upper and Lower Frame Configuration

File name (Drawing #): 85012

Status: NA

© 2010 The information contained in this drawing is the sole property of PDG Mobility

Third angle projection

Tolerances unless otherwise stated:
Angular: +/- 1°
Other x +/-0.8, x.x+/-0.4, x.xx+/-0.15

Units

Sheet 1 of 1

Date of Issue 2016 Jul 07

Revision 1

Seat Height Table – Fuze T20 (and wide Fuze T50)

Rear Wheel	SEAT HEIGHT 5" Fork/ 5"Casters				
12" (pneumatic)					13"
					APW(5)
					CJ-S
					CFP(1)
					SD(0.5")

Rear Wheel	SEAT HEIGHT 5" Fork/ 5"Casters				
16"	13"	14"	15"		
	APW(3)	APW(4)	AP(5)		
	CJ-S	CJ-S	CJ-S		
	CFP(1)	CFP(1)	CFP(2)		
	SD(0.5")	SD(1.5")	SD(1.5")		

Rear Wheel	SEAT HEIGHT 5" Fork/ 5"Casters				
20"	13"	14"	15"	16"	17"
	APW(1)	APW(2)	AP(3)	AP(4)	AP(5)
	CJ-S	CJ-S	CJ-S	CJ-L	CJ-L
	CFP(1)	CFP(1)	CFP(2)	CFP(2)	CFP(2)
	SD(0.5")	SD(1.5")	SD(1.5")	SD(2.5")	SD(3.5")

Rear Wheel	SEAT HEIGHT 5" Fork/ 5"Casters			
22"	14"	15"	16"	17"
	APW(1)	APW(2)	AP(3)	AP(4)
	CJ-S	CJ-S	CJ-L	CJ-L
	CFP(2)	CFP(2)	CFP(2)	CFP(2)
	SD(0.5")	SD(1.5")	SD(2.5")	SD(3.5")

Rear Wheel	SEAT HEIGHT 5" Fork/ 5"Casters		
24"	15"	16"	17"
	APW(1)	APW(2)	AP(3)
	CJ-L	CJ-L	CJ-L
	CFP(1)	CFP(1)	CFP(2)
	SD(2.5")	SD(3.5")	SD(3.5")

Rear Wheel	SEAT HEIGHT 6" Fork / 6" Casters		
16"	14"	15"	
	APW(4)	APW(5)	
	CJ-S	CJ-S	
	CFP(1)	CFP(1)	
	SD(0.5")	SD(1.5")	

Rear Wheel	SEAT HEIGHT 6" Fork / 6" Casters			
20"	14"	15"	16"	17"
	APW(2)	AP(3)	AP(4)	AP(5)
	CJ-S	CJ-S	CJ-M	CJ-M
	CFP(1)	CFP(1)	CFP(2)	CFP(2)
	SD(0.5")	SD(1.5")	SD(1.5")	SD(2.5")

Rear Wheel	SEAT HEIGHT 6" Fork / 6" Casters				
22"	14"	15"	16"	17"	18"
	APW(1)	APW(2)	AP(3)	AP(4)	AP(5)
	CJ-S	CJ-S	CJ-S	CJ-L	CJ-L
	CFP(1)	CFP(1)	CFP(2)	CFP(2)	CFP(2)
	SD(0.5")	SD(1.5")	SD(1.5")	SD(2.5")	SD(3.5")

Rear Wheel	SEAT HEIGHT 6" Fork / 6" Casters				
24"	15"	16"	17"	18"	
	APW(1)	APW(2)	AP(3)	AP(4)	
	CJ-M	CJ-M	CJ-L	CJ-L	
	CFP(1)	CFP(1)	CFP(2)	CFP(2)	
	SD(1.5")	SD(2.5")	SD(2.5")	SD(3.5")	

Rear Wheel	SEAT HEIGHT 8" Fork / 6" Caster		
16"	15"		
	APW(5)		
	CJ-S		
	CFP(1)		
	SD(0.375")		

Rear Wheel	SEAT HEIGHT 8" Fork / 6" Caster			
20"	15"	16"	17"	
	AP(3)	AP(4)	AP(5)	
	CJ-S	CJ-S	CJ-S	
	CFP(1)	CFP(1)	CFP(2)	
	SD(0.375")	SD(1.375")	SD(1.375")	

Rear Wheel	SEAT HEIGHT 8" Fork / 6" Caster				
22"	15"	16"	17"	18"	
	APW(2)	AP(3)	AP(4)	AP(5)	
	CJ-S	CJ-S	CJ-M	CJ-M	
	CFP(1)	CFP(1)	CFP(2)	CFP(2)	
	SD(0.375")	SD(1.375")	SD(1.375")	SD(2.375")	

Rear Wheel	SEAT HEIGHT 8" Fork / 6" Caster				
24"	15"	16"	17"	18"	19"
	APW(1)	APW(2)	AP(3)	AP(4)	AP(5)
	CJ-S	CJ-S	CJ-L	CJ-L	CJ-L
	CFP(1)	CFP(1)	CFP(1)	CFP(1)	CFP(2)
	SD(0.375")	SD(1.375")	SD(2.375")	SD(3.375")	SD(3.375")

Rear Wheel	SEAT HEIGHT 8" Fork / 8" Caster ALL VARIETIES		
20"	16"	17"	
	AP(4)	AP(5)	
	CJ-S	CJ-S	
	CFP(1)	CFP(1)	
	SD(0.375")	SD(1.375")	

Rear Wheel	SEAT HEIGHT 8" Fork / 8" Caster ALL VARIETIES			
22"	16"	17"	18"	
	AP(3)	AP(4)	AP(5)	
	CJ-S	CJ-S	CJ-S	
	CFP(1)	CFP(1)	CFP(2)	
	SD(0.375")	SD(1.375")	SD(1.375")	

Rear Wheel	SEAT HEIGHT 8" Fork / 8" Caster ALL VARIETIES			
24"	16"	17"	18"	19"
	APW(2)	AP(3)	AP(4)	AP(5)
	CJ-S	CJ-S	CJ-M	CJ-M
	CFP(1)	CFP(1)	CFP(2)	CFP(2)
	SD(0.375")	SD(1.375")	SD(1.375")	SD(2.375")

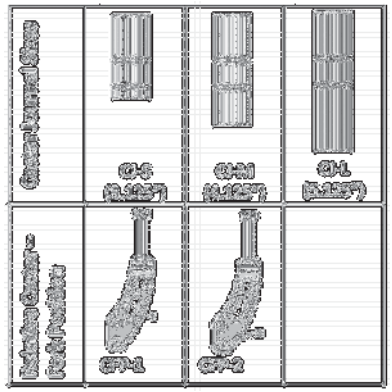

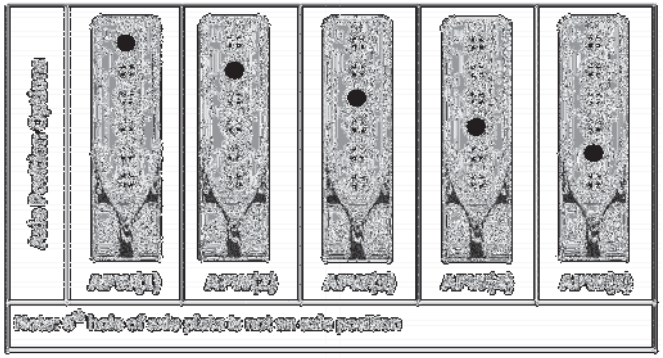

Relative caster fork position (CFP) and setup distance (SD) illustration

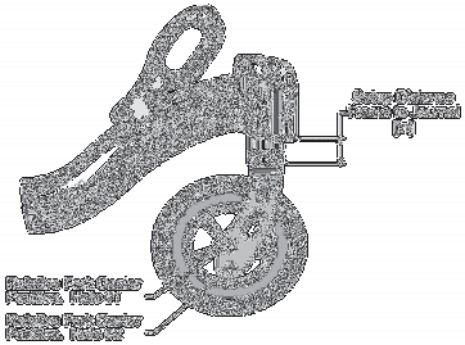

Rev.	Revision description:				ECO #
04	Addition to title - (and wide Fuze T50)				1433
Approved by: TB	Revised by: BA	Filename (Drawing #):	85018	Date of Issue:	April 1st 2014
				Sheet	1 of 1

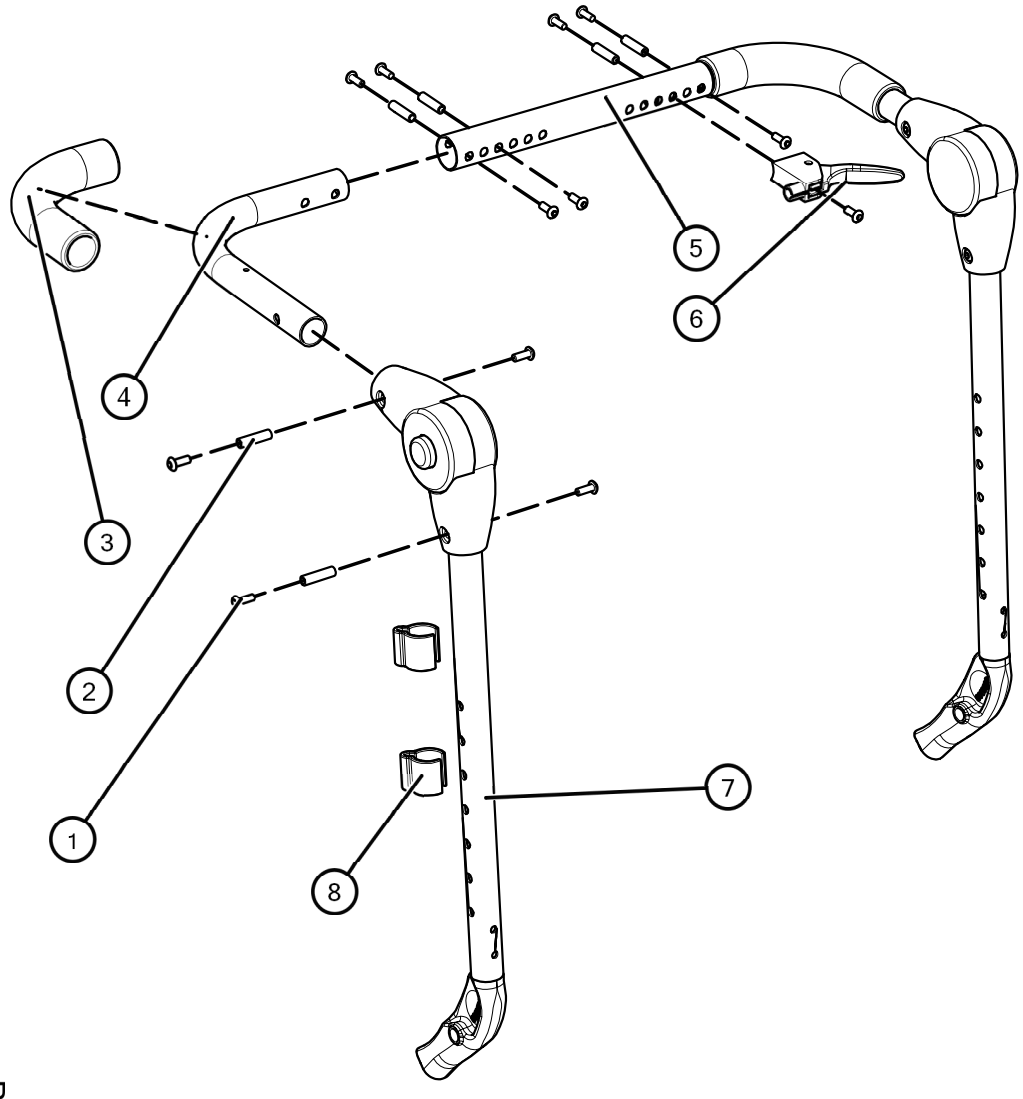

Title: Fuze T50 Angle Adjustable Backrest Upper
Document: 68361
Revision: 0
Date: July 2015

BOM ID	Description	Qty	PartNo
1	10-32x1/2" Socket Button Head - Black Zinc	16	1411
2	1/4" OD x 0.937" Long Standoff for Push Handle	8	4727
3	Extended Foam Grip for Push Bar	2	1512
4	Angle Adjustable Push Bar Corner	2	5911
5	Push Bar - Link Tube	1	Pick Size
5.1	Push Bar Link Tube 12" - 14"	1	6946
5.2	Push Bar Link Tube 13" - 15"	1	6947
5.3	Push Bar Link Tube 14" -16"	1	6948
5.4	Push Bar Link Tube 15" - 17"	1	6949
5.5	Push Bar Link Tube 16" - 18"	1	6950
5.6	Push Bar Link Tube 17" - 19"	1	6951
5.7	Push Bar Link Tube 18" - 20"	1	6952
5.8	Push Bar Link Tube 20" - 22"	1	6954
6	Trigger assembly	1	10906
7	Back Tube - Angle Adjustable - ASM	2	Pick Size/Style
7.1	20" Angle Adjustable Back Tuben Assy - Straight	1	9030
7.2	25" Angle Adjustable Back Tube Assy - Straight	2	9031
7.3	20" Angle Adjustable Back Tube Assy - Bent	2	9032
7.4	25" Angle Adjustable Back Tube Assy - Bent	2	9033
8	Cable clip	2	10246

Rev	Revision description	ECO#
3	Clarify setup chart	1296

Chair Width	12"	13"	14"	15"	16"	17"	18"	19"	20"	21"	22"
Push Bar Link Tube - size	12" - 14"	13" - 15"	14" - 16"	15"-17"	16"-18"	17"-19"	18"-20"	18"-20"	18"-20"	20" - 22"	20" - 22"
Hole Position	1 & 3	1 & 3	1 & 3	1 & 3	1 & 3	1 & 3	1 & 3	2 & 4	3 & 5	2 & 4	3 & 5

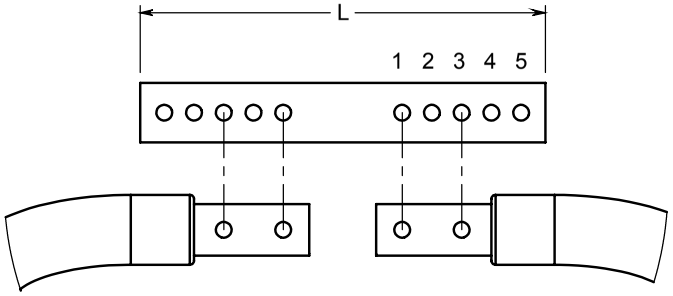

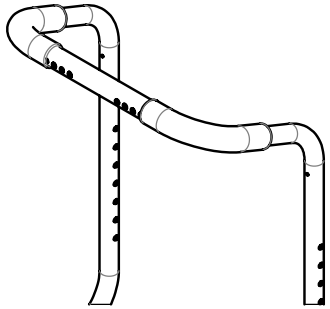

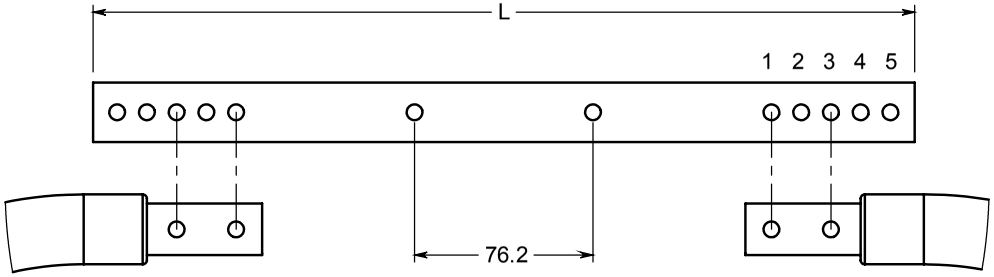

Headrest mounting holes.
Only on Link Tube
15" - 17" and up.

Push Bar Link Tube	
Push Bar Link Tube Size	Push Bar Link Tube Length L
12" - 14"	5 13/16"
13" - 15"	6 13/16"
14" - 16"	7 13/16"
15" - 17"	8 13/16"
16" - 18"	9 13/16"
17" - 19"	10 13/16"
18" - 20"	11 13/16"
19" - 21"	12 13/16"
20" - 22"	13 13/16"

PDG part number	Author	Technical reference	Revised by	Approved by
N/A	Author	NA	JB	TB

Title: Fuze Push Bar Setup Chart

File name (Drawing #): 85038

Status: -

© 2010 The information contained in this drawing is the sole property of PDG Mobility

Third angle projection

Tolerances unless otherwise stated:
Angular: +/- 1°
Othe x +/-0.8, x.x+/-0.4, x.xx+/-0.15

Units [mm]

Sheet 1 of 1

Date of Issue 2012/Jun/18

Revision 3

CUS: [ ]

Dimensioning and Tolerancing Standard ASME Y14.5-2009

Rev 00

Fuze Astrotilt Seat to Back Angle Setup Chart

Seat to Back Angle (A)	84°	90°	96°	102°	108°	114°	120°
Position Reference Hole	1	2	3	4	5	6	7

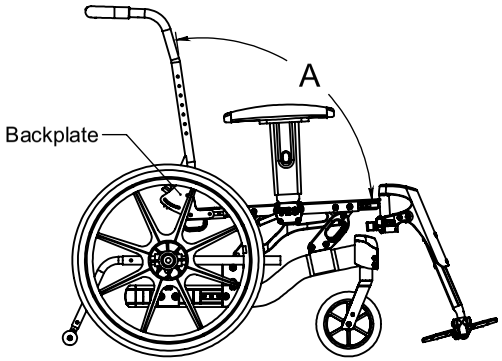

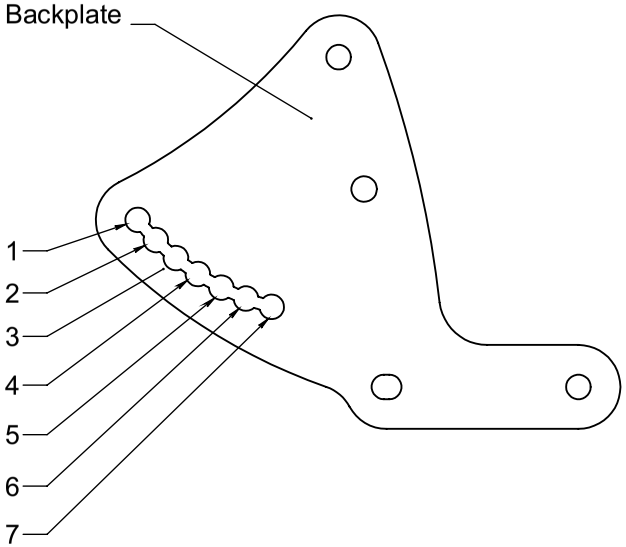

Title: Fuze Lower Frame Caster Fork Assembly
Document: 13005
Revision:0
Date:July 2015

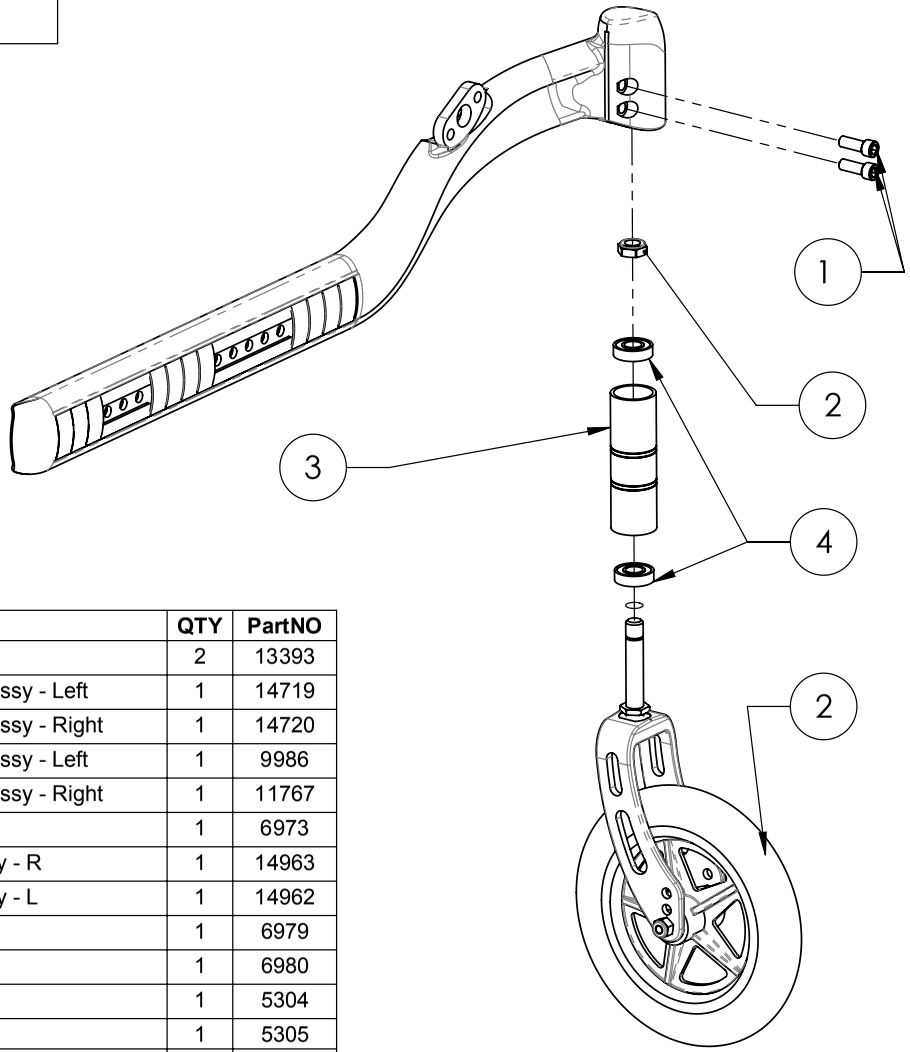

BOM ID	DESCRIPTION	QTY	PartNO
1	5/16-18 x 7/8" long socket head cap screw - Zinc Black	2	13393
2.1	6" X 1 1/4" Caster (Urethane Tire-Black), 8" Aluminum Fork & Stem Assy - Left	1	14719
2.2	6" X 1 1/4" Caster (Urethane Tire-Black), 8" Aluminum Fork & Stem Assy - Right	1	14720
2.3	6" X 1 1/4" Caster (Urethane Tire-Black), 6" Aluminum Fork & Stem Assy - Left	1	9986
2.4	6" X 1 1/4" Caster (Urethane Tire-Black), 6" Aluminum Fork & Stem Assy - Right	1	11767
2.5	5" X 1" Caster (Rubber Tire-Black), Aluminum Fork & Stem Assy	1	6973
2.6	8" X 1 1/4" Caster (Urethane Tire-Black), Aluminum Fork & Stem Assy - R	1	14963
2.7	8" X 1 1/4" Caster (Urethane Tire-Black), Aluminum Fork & Stem Assy - L	1	14962
2.8	8" X 2" Caster (Urethane Tire-Black), Aluminum Fork & Stem Assy	1	6979
2.9	8" X 2" Caster (Pneumatic Tire-Gray), Aluminum Fork & Stem Assy	1	6980
3.1	Fuze Caster Journal - Long	1	5304
3.2	Fuze Caster Journal - Medium	1	5305
3.3	Fuze Caster Journal - Short	1	5306
4	Bearings 1/2" ID x 1 1/8" OD x 5/16" th (R8RS)	2	15196

REV	Revision Description
1	Corrected Oreintation of Item 2

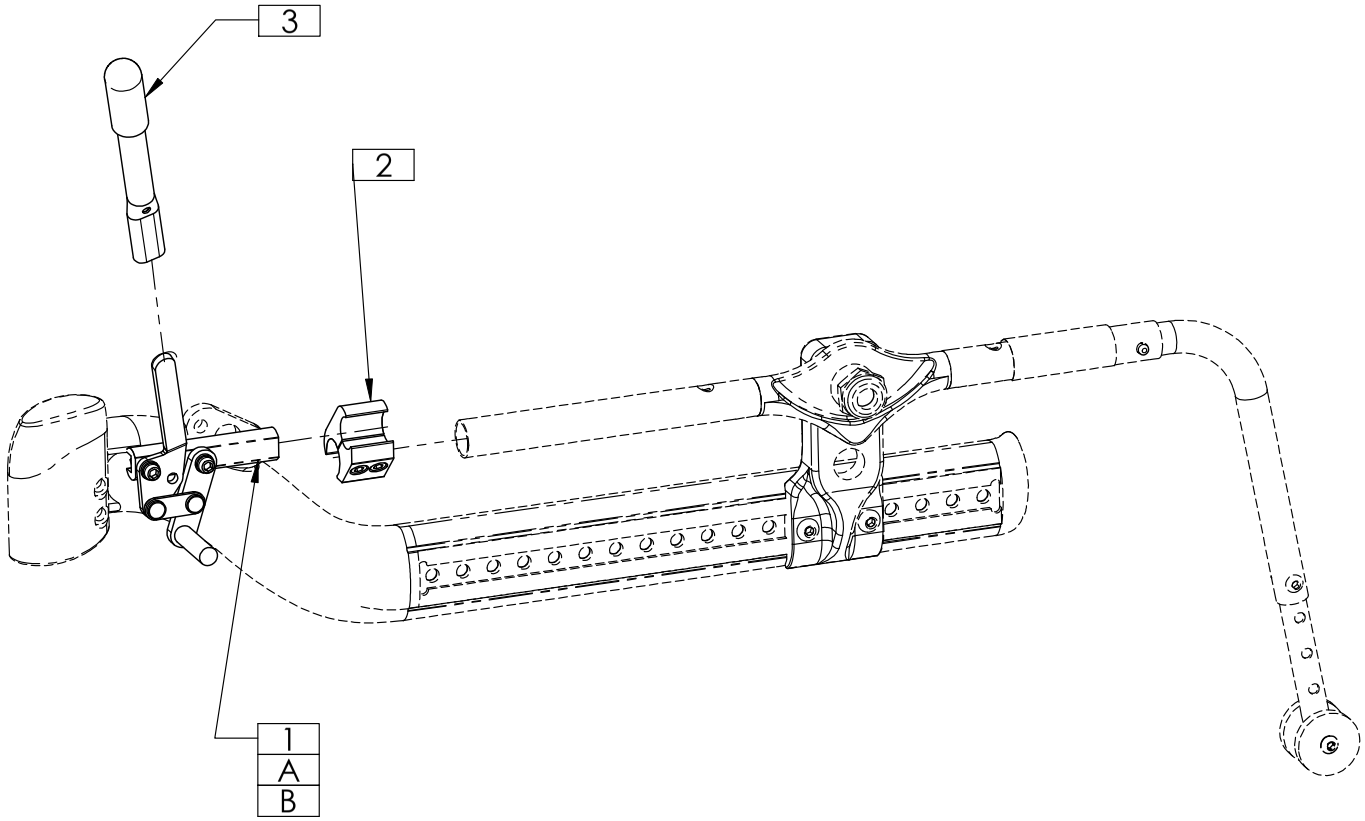

pdg®	Assembly Notes: Left Side Shown. Remove plastic handle to insert wheel lock extension.	Drawing # 13006	Author JF	Approved WS
© 2010 The information contained in this drawing is the sole property of PDG Mobility	Description: Fuze T50 User-Operated Push Wheel Locks	Date of Issue Apr 12, 2011		Revision 1

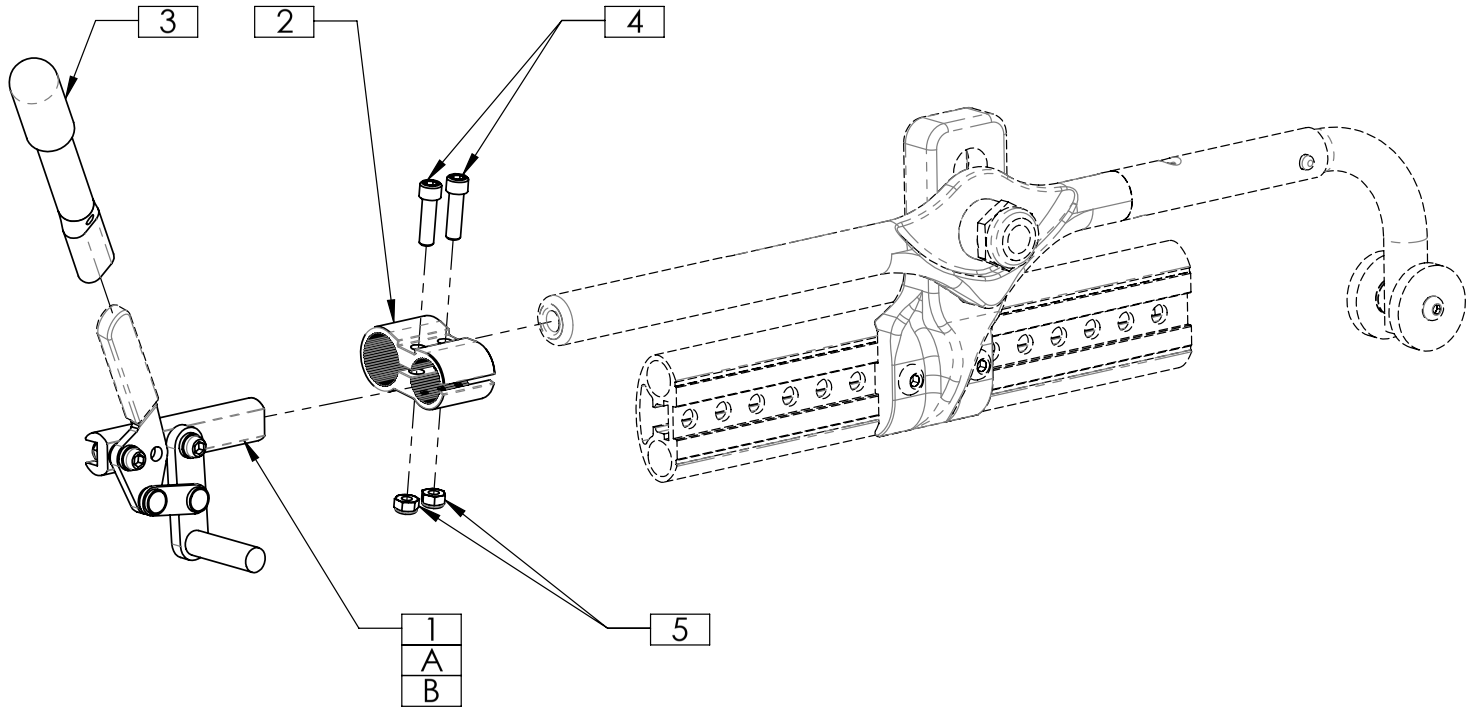

pdg®	Assembly Notes: Left Side Shown. Remove plastic handle to insert wheel lock extension.	Drawing # 13046	Author LS	Approved WS
© 2010 The information contained in this drawing is the sole property of PDG Mobility	Description: Fuze T50 User-Operated Push Wheel Locks	Date of Issue Jul 26, '10		Revision 1

REV	Revision Description
1	Changed Orientation of Item 2

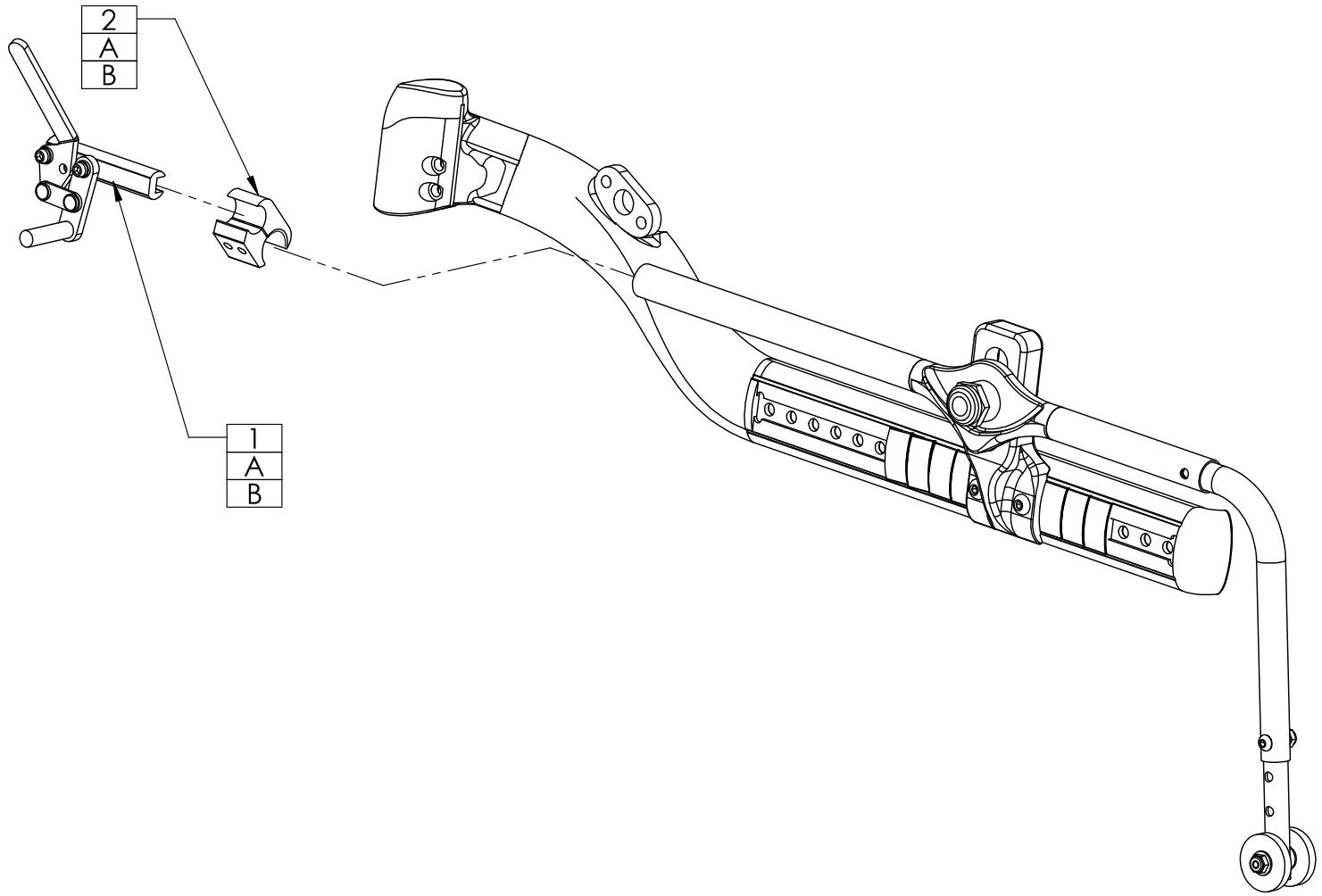

© 2010 The information contained in this drawing is the sole property of PDG Mobility

Assembly Notes: Left is Shown	Drawing # 13091	Author JF	Approved WS
Description: Fuze T50 User-Operated Push Wheel Locks - 20"-22" Wheels	Date of Issue Apr 15, 2011		Revision 1

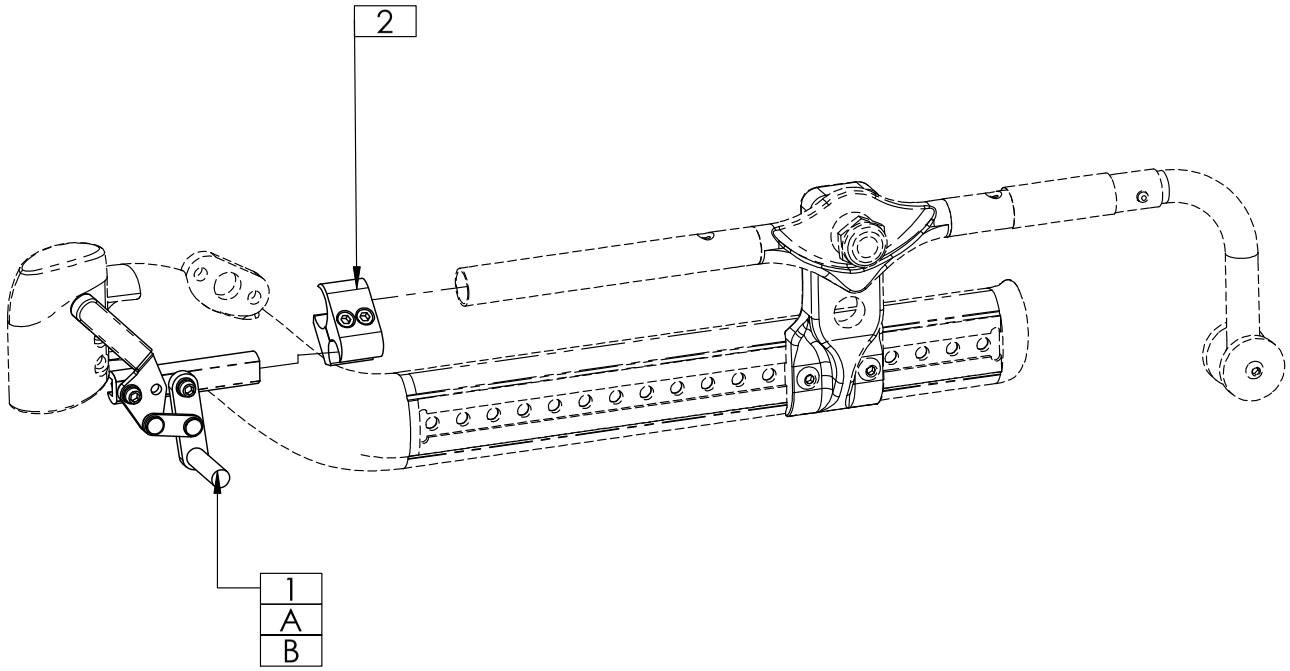

pdg®	Assembly Notes: Left Side Shown. Remove plastic handle to insert wheel lock extension.	Drawing # 13105	Author JF	Approved WS
© 2010 The information contained in this drawing is the sole property of PDG Mobility	Description: Fuze T50 User-Operated Push Wheel Locks - 12"and 16"	Date of Issue Apr 27, 2011	Revision 0

Fuze Wheellock Clamp configuration

rev 01

Regular Clamp

	Wheel Size	12"	16"	20"	22"	24"
T50	Bolt heads:	out	out	out	out	in
T20 Narrow	Bolt heads:	in	in	in	in	in

Regular Clamp, bolt heads facing ***out***

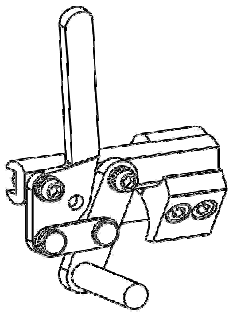

Regular Clamp, bolt heads facing ***in*** (reversed tread)

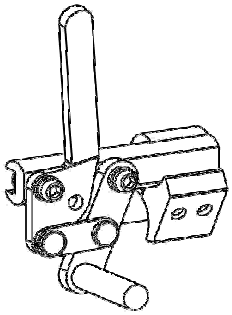

Figure 8-style Clamp

T20 Wide	Bolt heads:	out	out	in	in	in
	Axle Position					

Figure-8 clamp, bolts facing ***out***

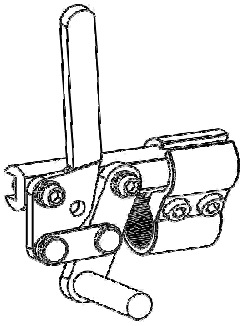

Figure-8 clamp, bolts facing ***in*** (flip clamp)

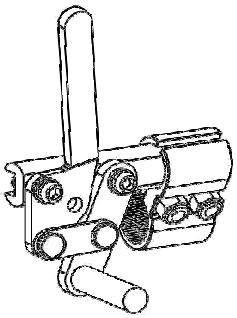

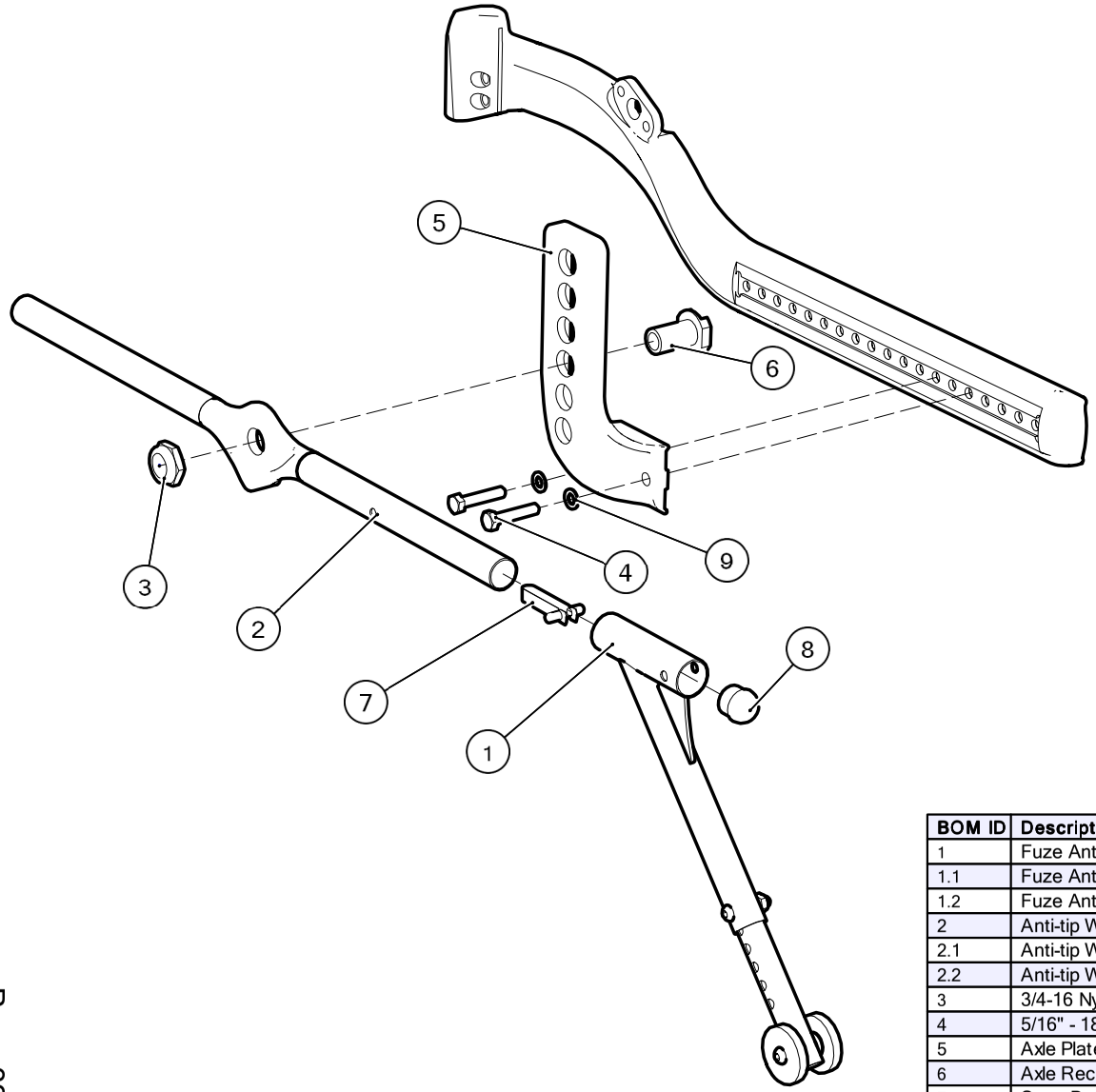

Title: Fuze T20 Antitip Mount w/Attendant Wheel Lock 20" RW
Document: 15025
Revision: 0
Date: February 2014

BOM ID	Description	Qty	PartNo
1	Fuze Anti-tipper with Attendant Wheel Lock (for 20", 22" & 24" wheel)	1	Pick Side
1.1	Fuze Anti-tipper with Attendant Wheel Lock (for 20", 22" & 24" wheel) - Left	1	9283
1.2	Fuze Anti-tipper with Attendant Wheel Lock (for 20", 22" & 24" wheel) - Right	1	11046
2	Anti-tip Wheel-lock Mount Assembly (LH/RH)	1	Pick Side
2.1	Anti-tip Wheel-lock Mount Bracket 20 - Left	1	7918
2.2	Anti-tip Wheel-lock Mount Bracket 20 - Right	1	7919
3	3/4-16 Nylon Locknut - Thin - Black Zinc	1	3620
4	5/16" - 18 x 1 1/2" Hex Head Bolt	2	13394
5	Axle Plate - 5 Position	1	7045
6	Axle Reciever - Short	1	7553
7	Snap Button (Double sided)	1	4871
8	Tube Cap - 7/8" Round for Middle Arms	1	10464
9	0.32 ID 0.562 OD .057"-.069" Thk Washer	2	10606

Title: Fuze T20 Antitip Mount w/Attendant or User Wheel Locks 16" RW
Document: 15026
Revision: 0
Date: February 2014

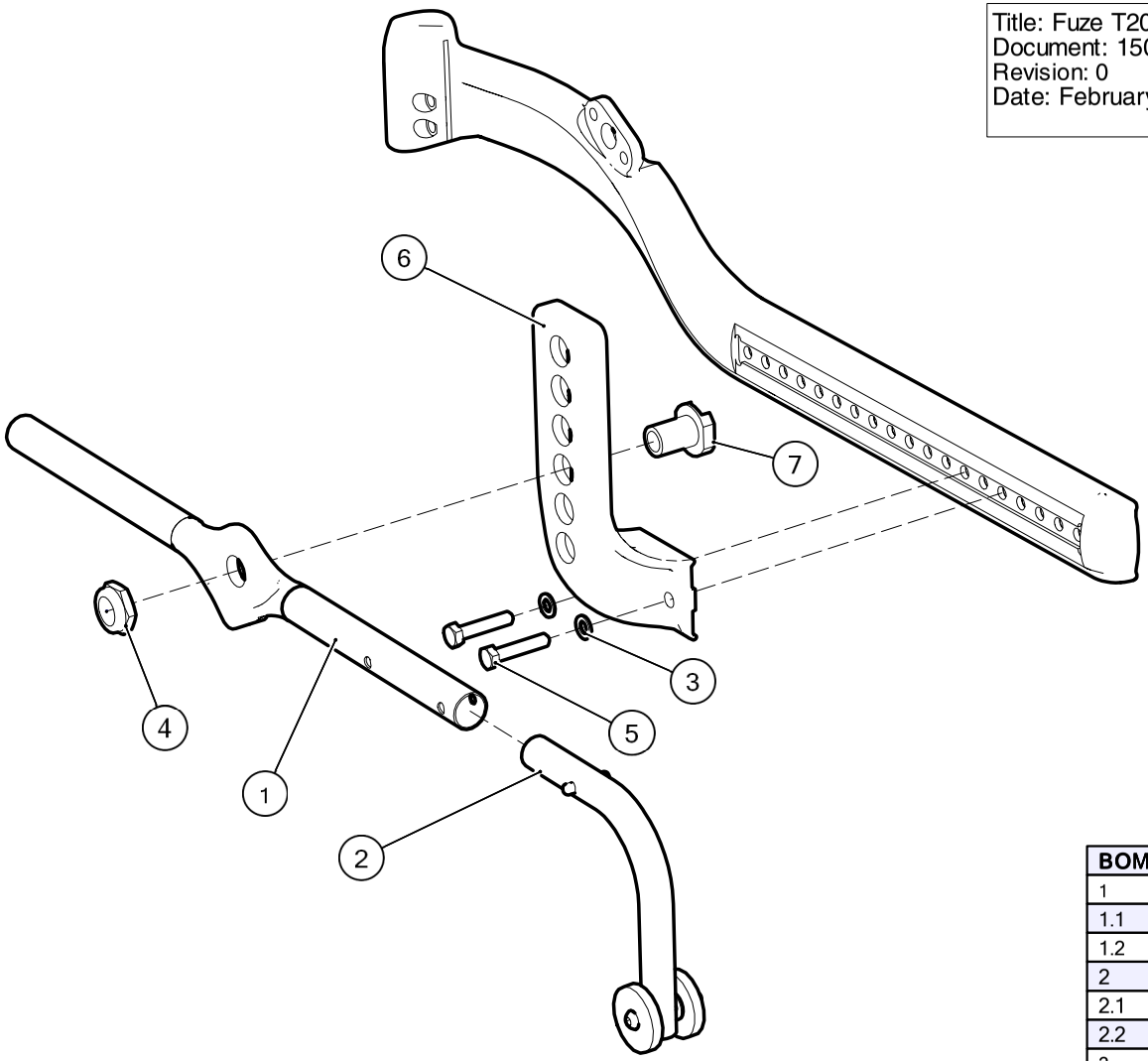

BOM ID	Description	Qty	PartNo
1	Anti-tip Wheel-lock Mount Assembly (LH/RH)	1	Pick Side
1.1	Anti-tip Wheel-lock Mount Assembly - Left	1	7914
1.2	Anti-tip Wheel-lock Mount Assembly - Right	1	7915
2	Fuze 16" RW Antitipper	1	Pick Side
2.1	Fuze 16" RW Antitipper - Left	1	9200
2.2	Fuze 16" RW Antitipper - Right	1	11048
3	0.32 ID 0.562 OD .057"-.069" Thk Washer	2	10606
4	3/4-16 Nylon Locknut - Thin - Black Zinc	1	3620
5	5/16" - 18 x 1 1/2" Hex Head Bolt	2	13394
6	Axle Plate - 5 Position	1	7045
7	Axle Reciever	1	7553

Title: Fuze T20 Antitip Mount w/ User or Attendant Wheel Locks 12" RW
Document: 15024
Revision: 0
Date: February 2014

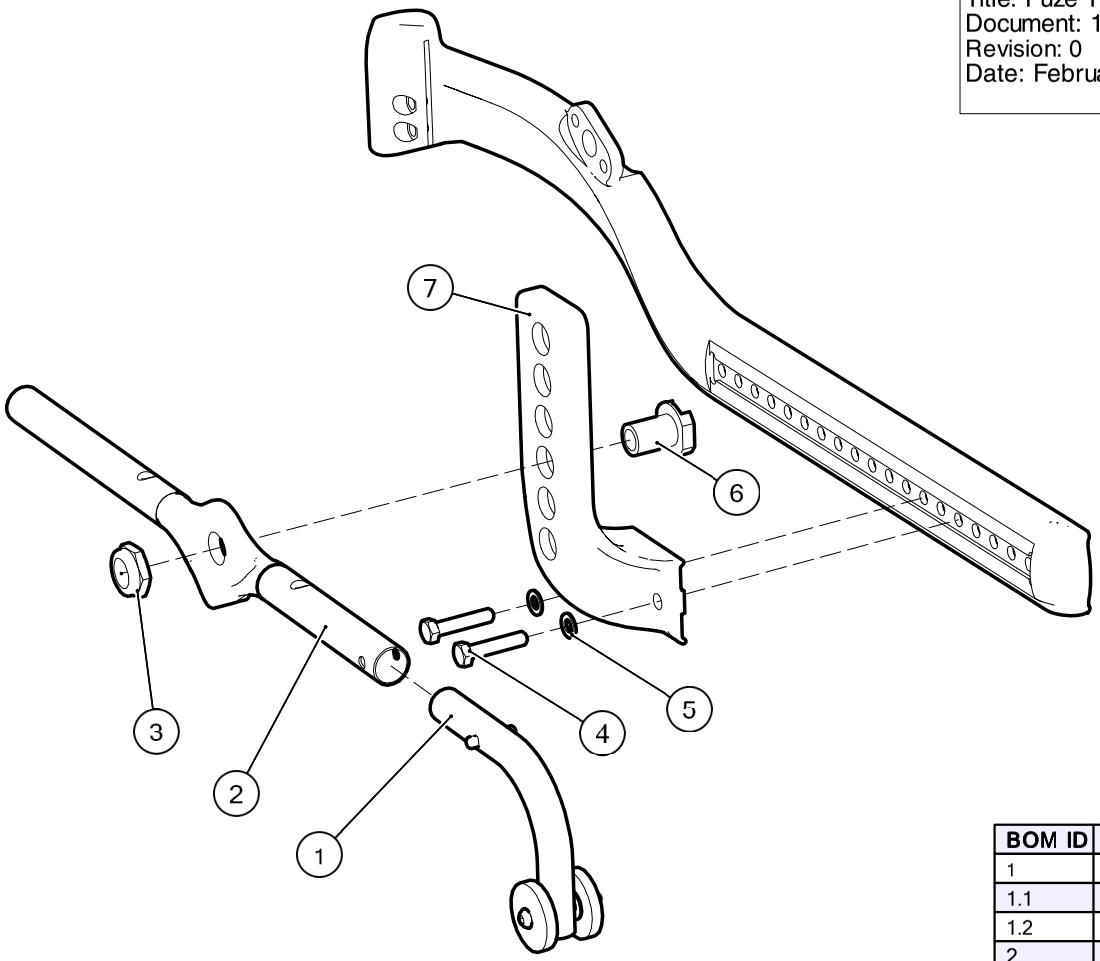

BOM ID	Description	Qty	PartNo
1	Fuze 12" RW Anti-tipper with and without Attendant	1	Pick Side
1.1	Assm. Wheellock Antitipper Bracket 12 - Left	1	7912
1.2	Assm.Wheellock Antitipper Bracket 12 - Right	1	7913
2	Anti-tip Wheel-lock Mount Assembly (LH/RH)	1	Pick Side
2.1	Fuze 12" RW Anti-tipper with and without Attendant	1	9201
2.2	Fuze 12" RW Anti-tipper with and without Attendant	1	11049
3	3/4-16 Nylon Locknut - Thin - Black Zinc	1	3620
4	5/16" - 18 x 1 1/2" Hex Head Bolt	2	13394
5	0.32 ID 0.562 OD .057"-.069" Thk Washer	2	10606
6	Axle Reciever - Short	1	7553
7	Axle Plate - 5 Position	1	7045

Title: Fuze T50 Antitip Mount w/ User or Attendant Wheel Locks 12" RW
Document: 15027
Revision: 0
Date: March 2014

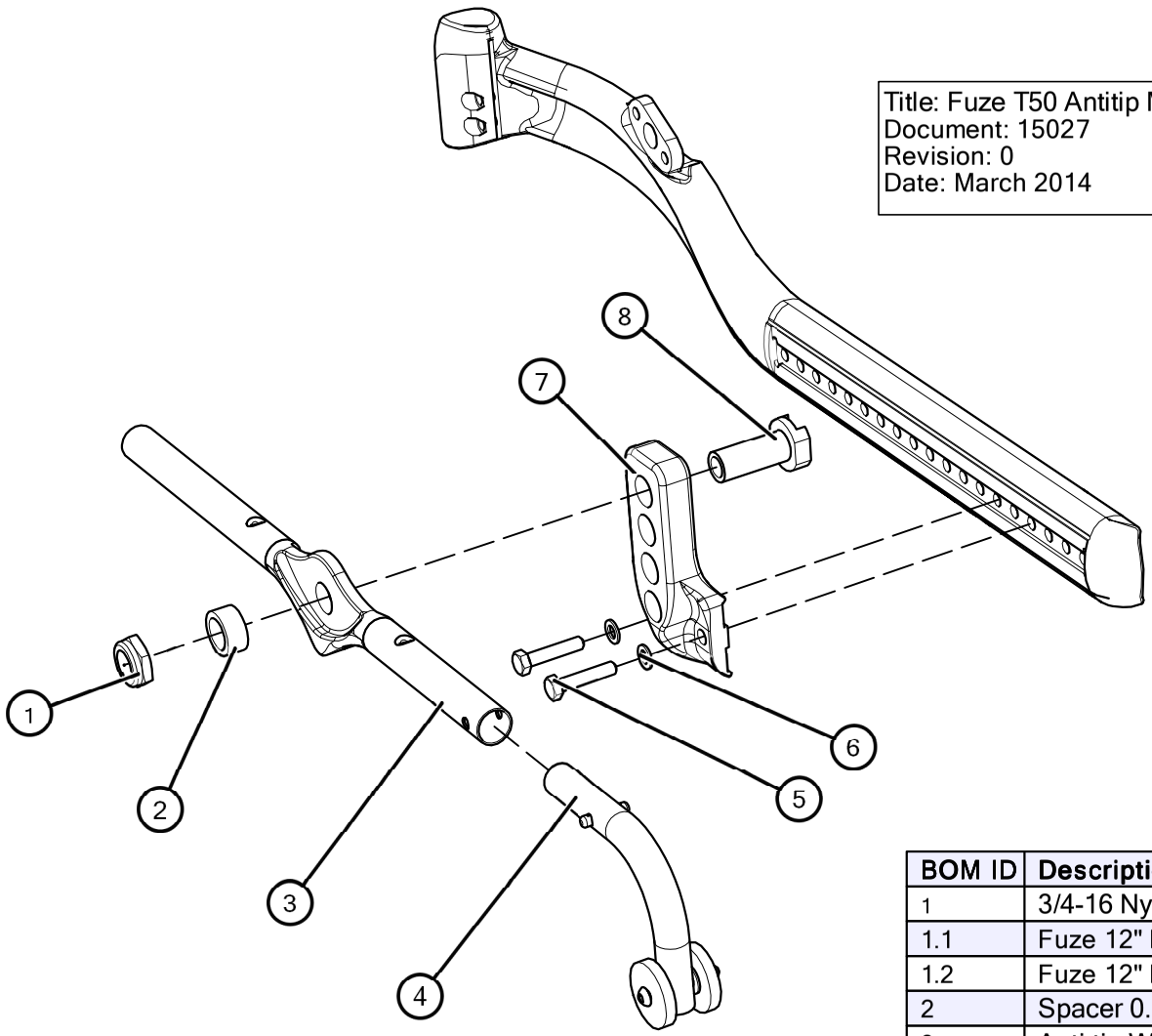

BOM ID	Description	Qty	PartNo
1	3/4-16 Nylon Locknut - Thin - Black Zinc	1	3620
1.1	Fuze 12" RW Anti-tipper Assembly - Left	1	7912
1.2	Fuze 12" RW Anti-tipper Assembly - Right	1	7913
2	Spacer 0.75" ID x 1.055" OD x 0.5" L	1	5759
3	Anti-tip Wheel-lock Mount Assembly (LH/RH)	1	Pick Size
3.1	Anti-tip Wheel-lock Mount Assembly - Left	1	9201
3.2	Anti-tip Wheel-lock Mount Assembly - Right	1	11049
4	Fuze 12" RW Anti-tipper Assembly	1	Pick Size
5	5/16" - 18 x 1 1/2" Hex Head Bolt	2	13394
6	0.32 ID 0.562 OD .057"-.069" Thk Washer	2	10606
7	Axle Plate - 3 Position	1	7043
8	Axle Reciever	1	7555

Title: Fuze T50 Antitip Mount w/ User Wheel Locks 20"22"24" RW
Document: 15003
Revision: 0
Date: March 2014

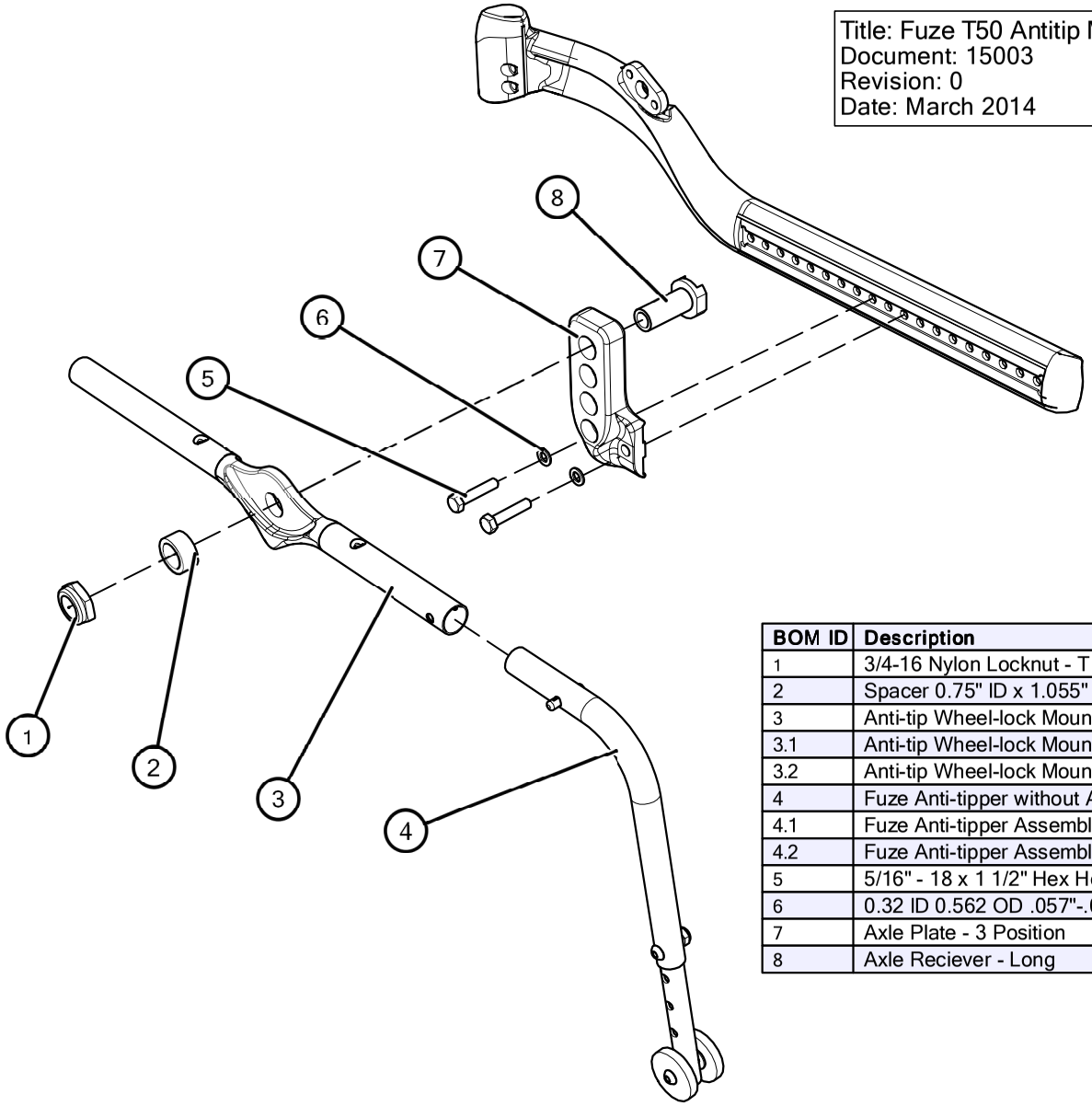

BOM ID	Description	Qty	PartNo
1	3/4-16 Nylon Locknut - Thin - Black Zinc	1	3620
2	Spacer 0.75" ID x 1.055" OD x 0.5" L	1	5759
3	Anti-tip Wheel-lock Mount Assembly (LH/RH)	1	Pick Side
3.1	Anti-tip Wheel-lock Mount Assembly - Left	1	7916
3.2	Anti-tip Wheel-lock Mount Assembly - Right	1	7917
4	Fuze Anti-tipper without Attendant Wheel Lock(for 20", 22" & 24" wheel)	1	Pick Side
4.1	Fuze Anti-tipper Assembly without Attendant Wheel Lock - Left	1	9199
4.2	Fuze Anti-tipper Assembly without Attendant Wheel Lock - Right	1	11047
5	5/16" - 18 x 1 1/2" Hex Head Bolt	2	13394
6	0.32 ID 0.562 OD .057"-.069" Thk Washer	2	10606
7	Axle Plate - 3 Position	1	7043
8	Axle Reciever - Long	1	7555

Title: Fuze T50 Antitip Mount w/ Attendant Wheel Locks 22" - 24"
Document: 15028
Revision: 0
Date: March 2014

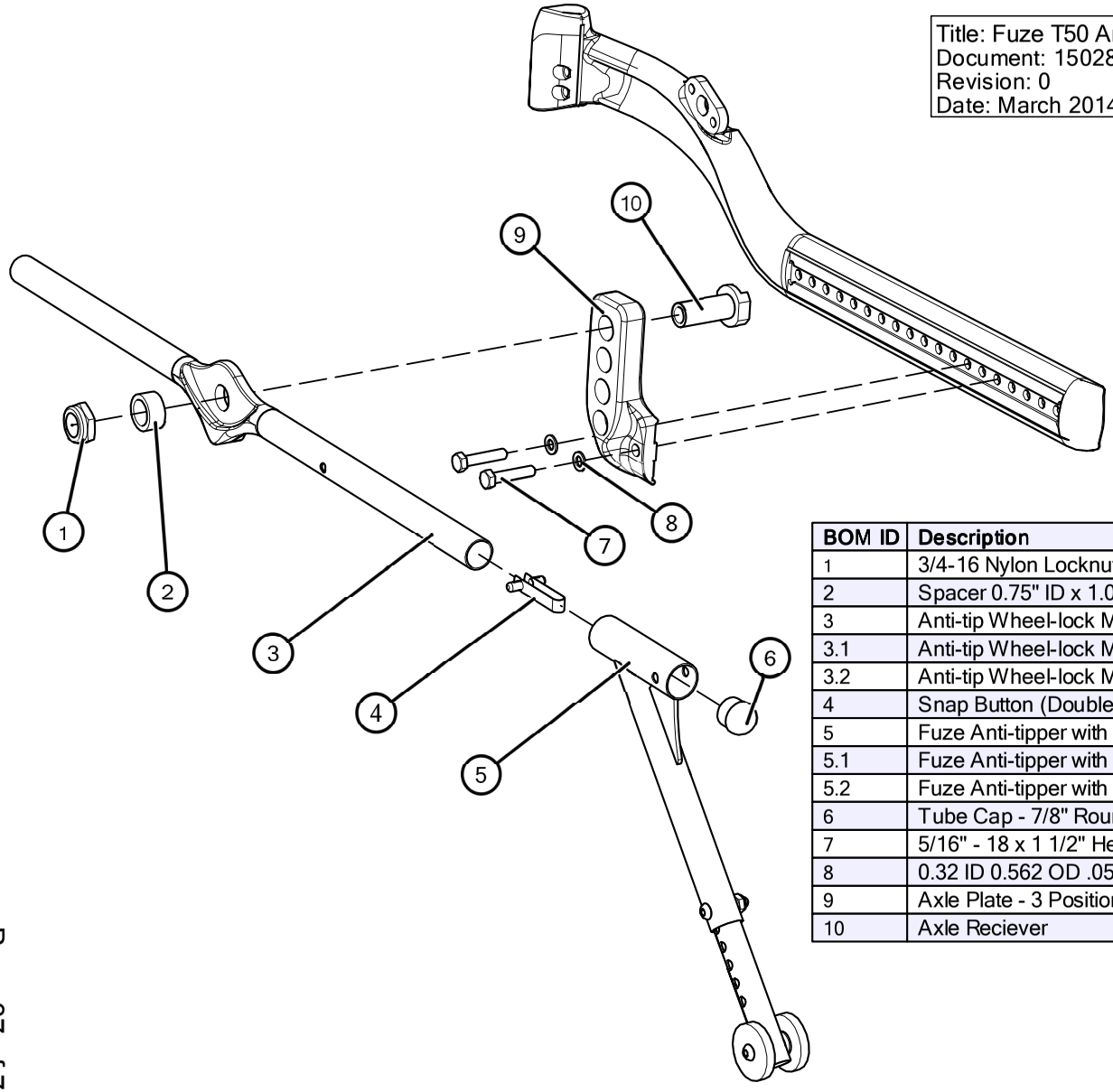

BOM ID	Description	Qty	PartNo
1	3/4-16 Nylon Locknut - Thin - Black Zinc	1	3620
2	Spacer 0.75" ID x 1.055" OD x 0.5" L	1	5759
3	Anti-tip Wheel-lock Mount Assembly (LH/RH)	1	Pick Side
3.1	Anti-tip Wheel-lock Mount Assembly - Left	1	7920
3.2	Anti-tip Wheel-lock Mount Assembly - Right	1	7921
4	Snap Button (Double sided)	1	4871
5	Fuze Anti-tipper with Attendant Wheel Lock (for 20", 22" & 24" wheel)	1	Pick Side
5.1	Fuze Anti-tipper with Attendant Wheel Lock (for 20", 22" & 24" wheel)	1	9283
5.2	Fuze Anti-tipper with Attendant Wheel Lock (for 20", 22" & 24" wheel)	1	11046
6	Tube Cap - 7/8" Round for Middle Arms	1	10464
7	5/16" - 18 x 1 1/2" Hex Head Bolt	2	13394
8	0.32 ID 0.562 OD .057"-.069" Thk Washer	2	10606
9	Axle Plate - 3 Position	1	7043
10	Axle Reciever	1	7555

Title: Fuze T50 Antitip Mount w/ Attendant or User Wheel Locks 16" RW
Document: 15029
Revision: 0
Date: March 2014

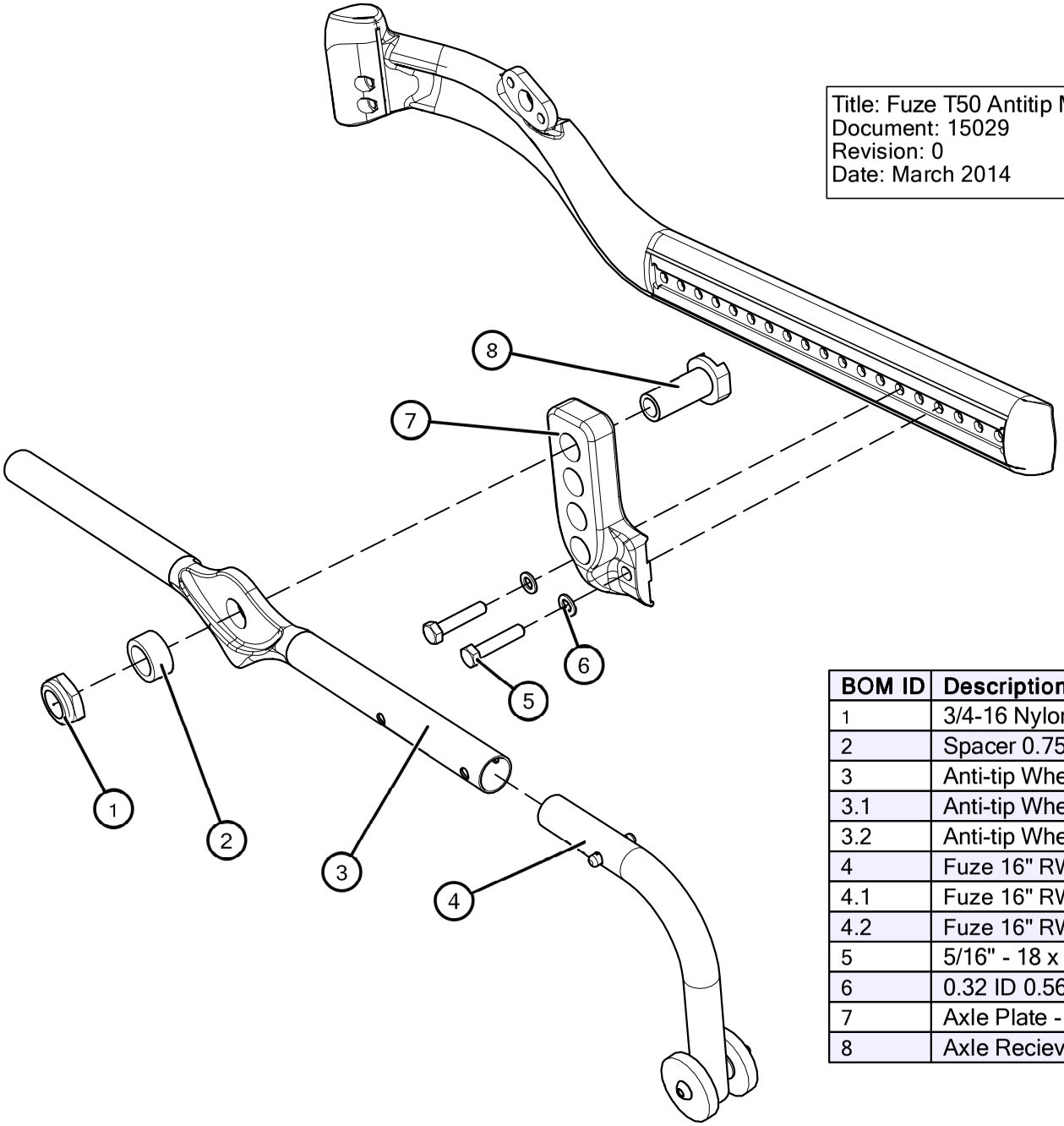

BOM ID	Description	Qty	PartNo
1	3/4-16 Nylon Locknut - Thin - Black Zinc	1	3620
2	Spacer 0.75" ID x 1.055" OD x 0.5" L	1	5759
3	Anti-tip Wheel-lock Mount Assembly (LH/RH)	1	Pick Side
3.1	Anti-tip Wheel-lock Mount Assembly - Left	1	7914
3.2	Anti-tip Wheel-lock Mount Assembly (RH/LH)	1	7915
4	Fuze 16" RW Antitipper	1	Pick Side
4.1	Fuze 16" RW Antitipper - Left	1	9200
4.2	Fuze 16" RW Antitipper - Right	1	11048
5	5/16" - 18 x 1 1/2" Hex Head Bolt	2	13394
6	0.32 ID 0.562 OD .057"-.069" Thk Washer	2	10606
7	Axle Plate - 3 Position	1	7043
8	Axle Reciever	1	7555

66124 - FUZE

Anti-tip Wheel-lock Configuration Chart
Rev 4
Jun 10 2009
SK

12" Anti-tipper Mount - With and Without Attendant Wheel Locks

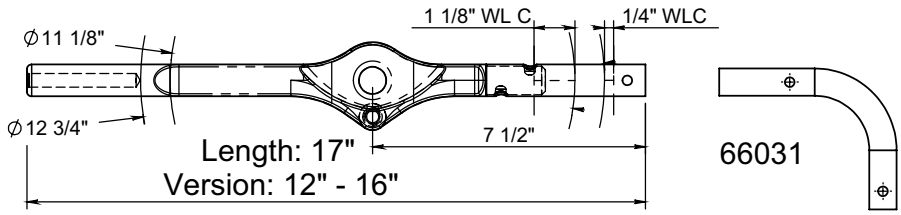

16" Anti-tipper Mount - Without Attendant Wheel Locks

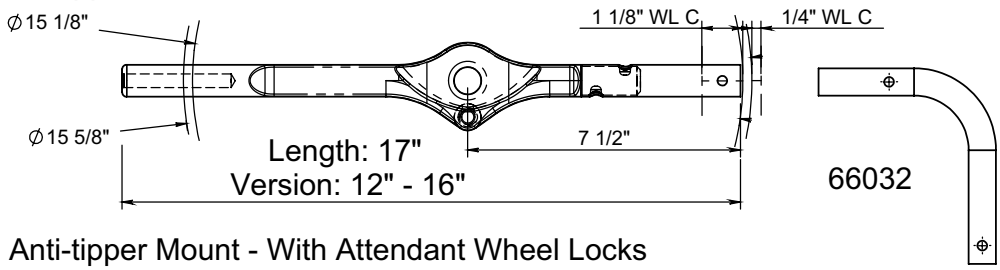

16" Anti-tipper Mount - With Attendant Wheel Locks

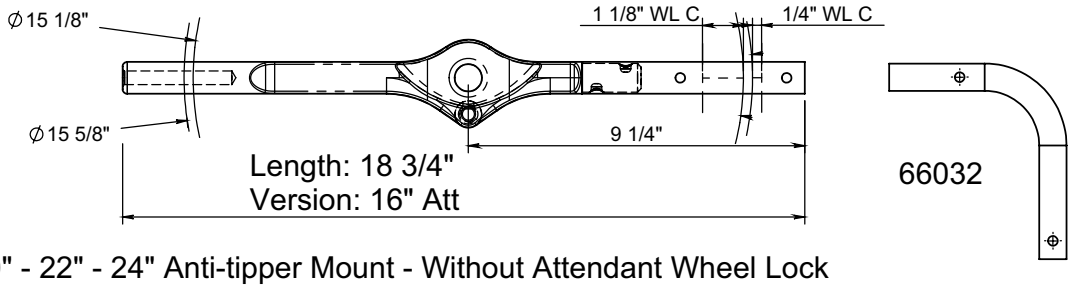

20" - 22" - 24" Anti-tipper Mount - Without Attendant Wheel Lock

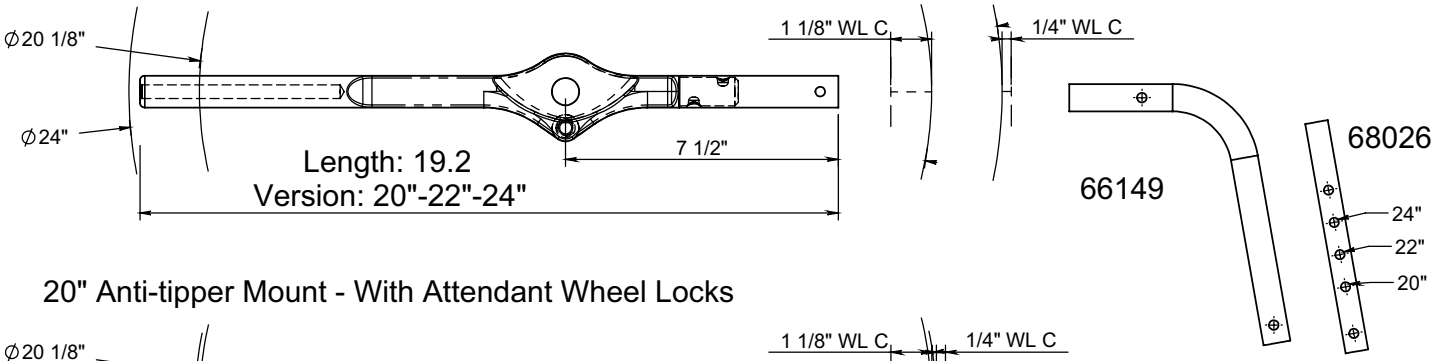

20" Anti-tipper Mount - With Attendant Wheel Locks

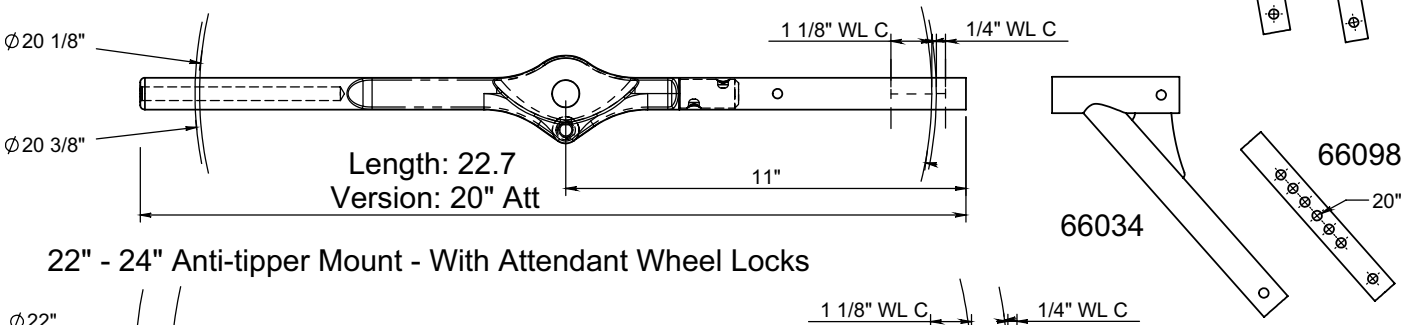

22" - 24" Anti-tipper Mount - With Attendant Wheel Locks

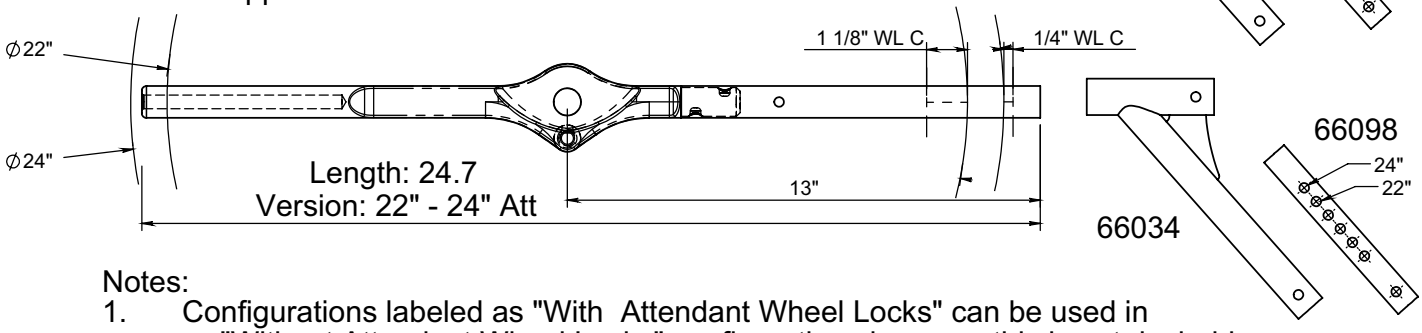

Notes:
1. Configurations labeled as "With Attendant Wheel Locks" can be used in "Without Attendant Wheel Locks" configurations however this is not desirable.
2. 66124 is a multiple version drawing. To pick see note on each configuration.

Title: Fuze - Front Rigging Adapter Assembly
Document: 68209
Revision: 0
Date: November 2013

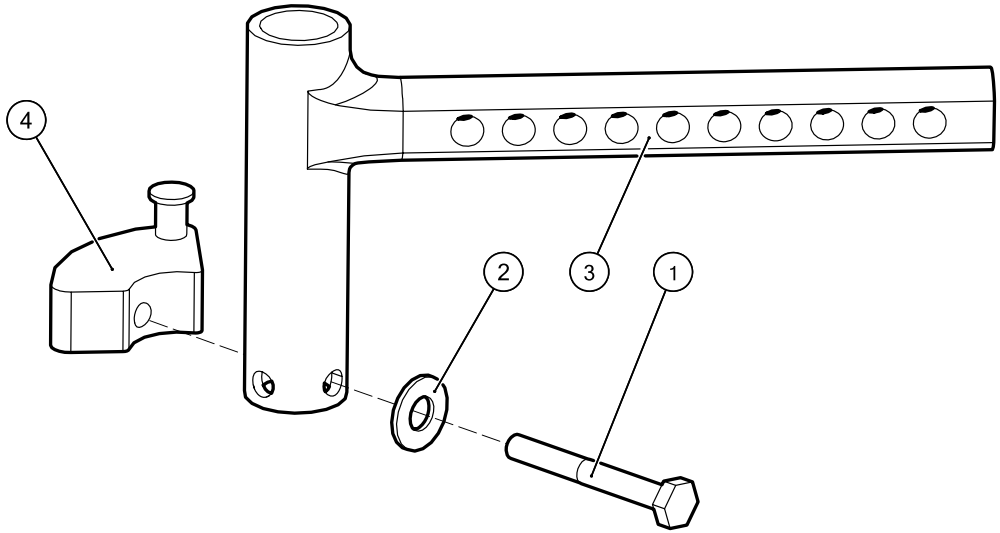

BOM ID	Description	Qty	PartNo
1	1/4-20 x 2" Hex Cap Bolt - Black Zinc	1	6160
1-3 - 5	Fuze SA front rigging adapter c/w sector block - R	1	6961
1-4	Fuze SA front rigging adapter c/w sector block - L	1	6960
2	5/16" ID x 11/16" OD Washer - Black Zinc	1	1428
3	Fuze Integrated Front Rigging Receiver	1	6787
4	Sector Block - right	1	6701
4.1	Sector Block - left	1	6700

Title: 70 Degree Swing Away Front Hanger
Document: 15011
Revision: 0
Date: January 2014

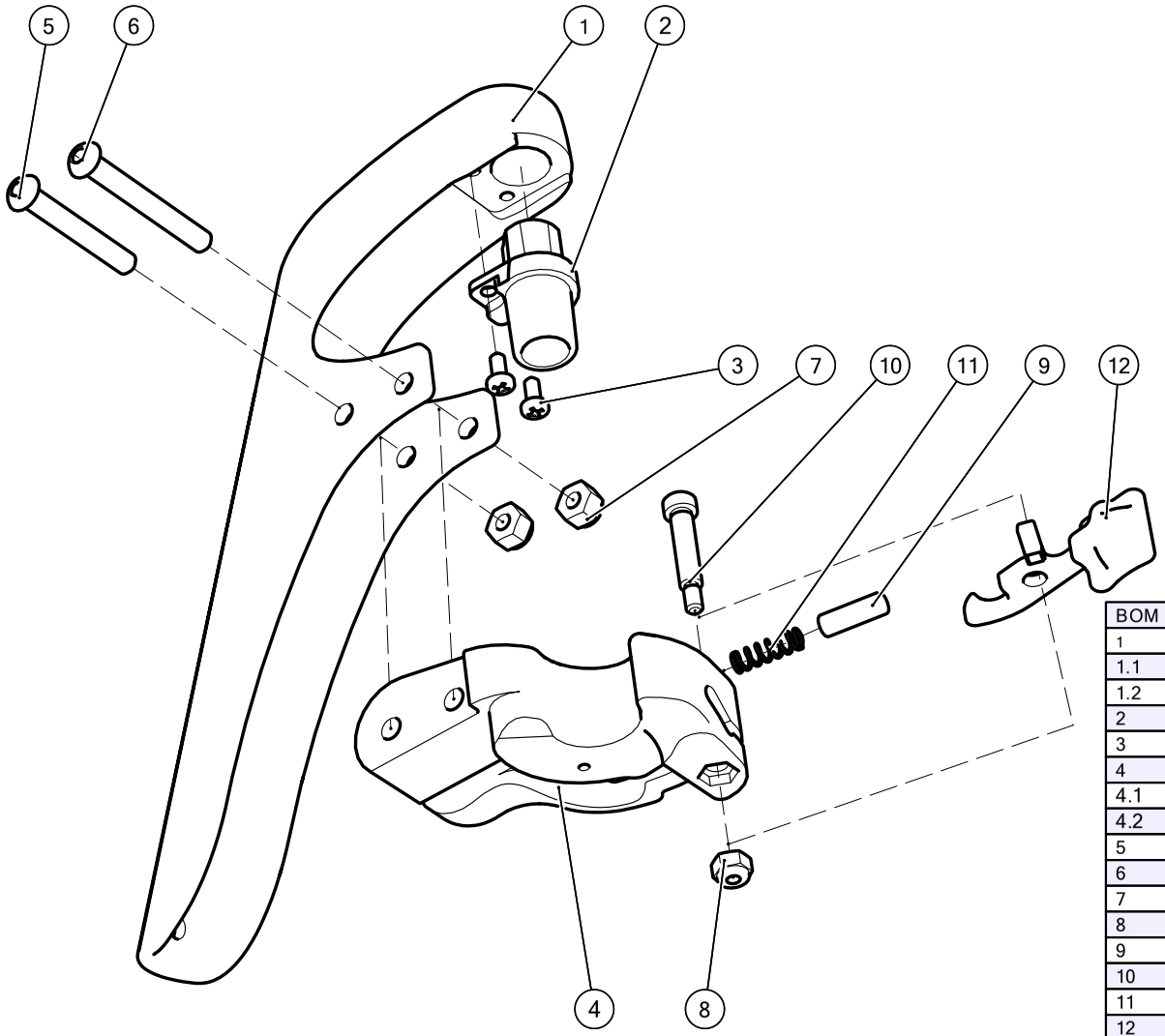

BOM ID	Description	Qty	PartNo
1	Front Rigging Hanger - 70 Deg	1	Pick Color
1.1	Front Rigging Hanger - 70 Deg - Black	1	6970
1.2	Front Rigging Hanger - 70 Deg - Grey	1	7572
2	Hanger Pivot Pin	1	6781
3	# 8 x 3/8" self-tapping phillips pan head screw	2	2549
4	Front Rigging - Latch Mount (LH/RH)	1	Pick Size
4.1	Front Rigging - Latch Mount - LH	1	6779
4.2	Front Rigging - Latch Mount - RH	1	6780
5	1/4-20x 1 3/4" Socket Button Head - Black Zinc	1	2685
6	1/4-20x 2" Socket Button Head - Black Zinc	1	3628
7	1/4-20 Nylon Locknut - Thick - Black Zinc	2	1390
8	10-24 Nylon Locknut - Thick - Black Zinc	1	1388
9	1/4" x 3/4" Platic Dowel Pin	1	6279
10	1/4"x1" Socket Head Shoulder Bolt - Black Zinc	1	3624
11	Spring - Coil - 0.24" OD x 1.00" L x 11.4 lbs/in	1	6344
12	Front Rigging - Catch	2	Pick Size
12.1	Front Rigging - Catch - LH	1	7153
12.2	Front Rigging - Catch - RH	1	7044

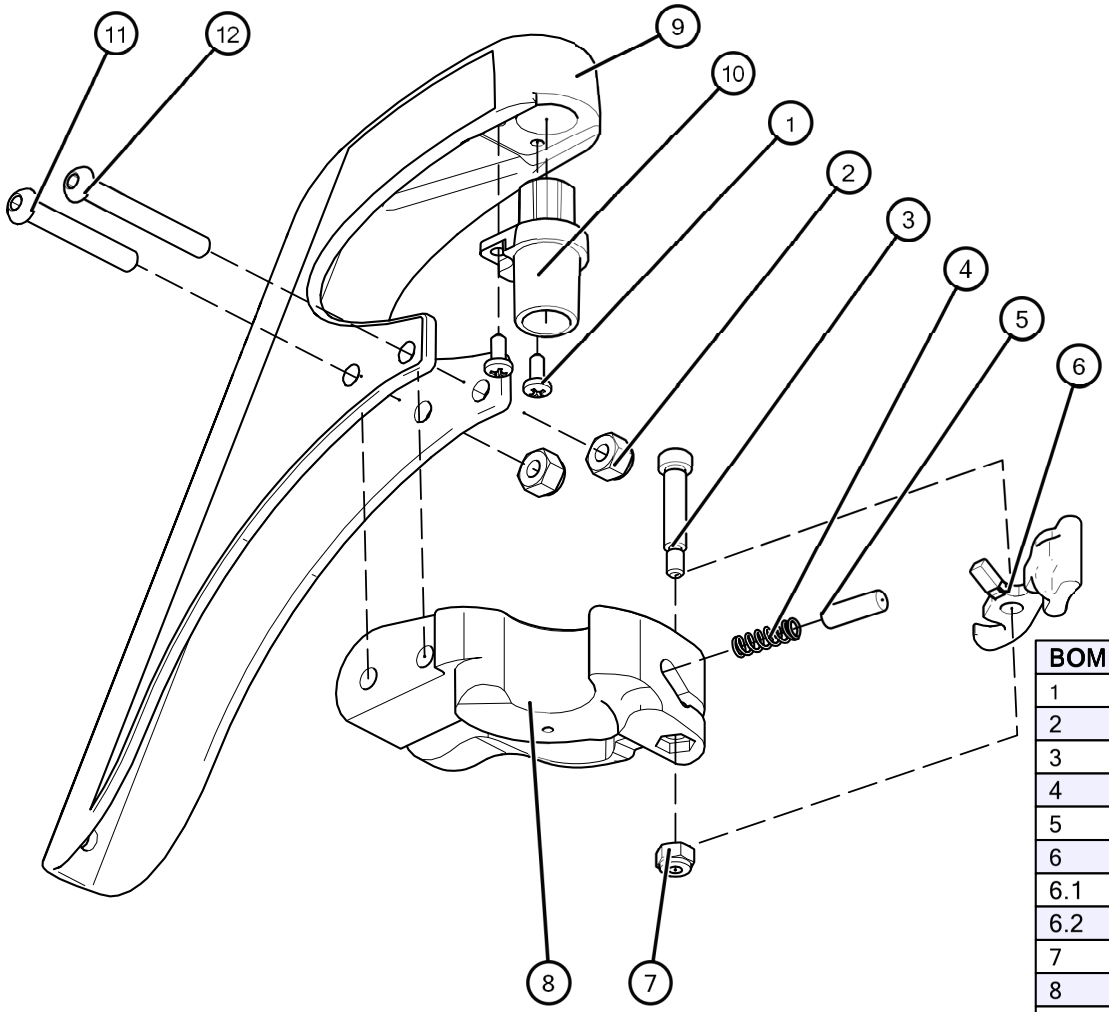

Title: 60 Degree Swing Away Front Hanger
Document: 13120
Revision: 0
Date: July 2015

BOM ID	Description	PartNo	Qty
1	# 8 x 3/8" self-tapping phillips pan head screw	2549	2
2	1/4-20 Nylon Locknut - Thick - Black Zinc	1390	2
3	1/4"x1" Socket Head Shoulder Bolt - Black Zinc .	3624	1
4	Spring - Coil - 0.24" OD x 1.00" L x 11.4 lbs/in	6344	1
5	1/4" x 3/4" Plastic Dowel Pin	6279	1
6	Front Rigging - Catch	Pick Side	1
6.1	Front Rigging - Catch - LH	7153	1
6.2	Front Rigging - Catch - RH	7044	1
7	10-24 Nylon Locknut - Thick - Black Zinc	1388	1
8	Front Rigging - Latch Mount	Pick Side	1
8.1	Front Rigging - Latch Mount - LH	6779	1
8.2	Front Rigging - Latch Mount - RH	6780	1
9	Front Rigging Hanger - 60 Deg	16809	1
10	Hanger Pivot Pin	6781	1
11	1/4-20x 1 3/4" Socket Button Head - Black Zinc	2685	1
12	1/4-20x 2" Socket Button Head - Black Zinc	3628	1

Title: ELR Assembly with Kneepad
Document: 15041
Revision: 0
Date: January 2014

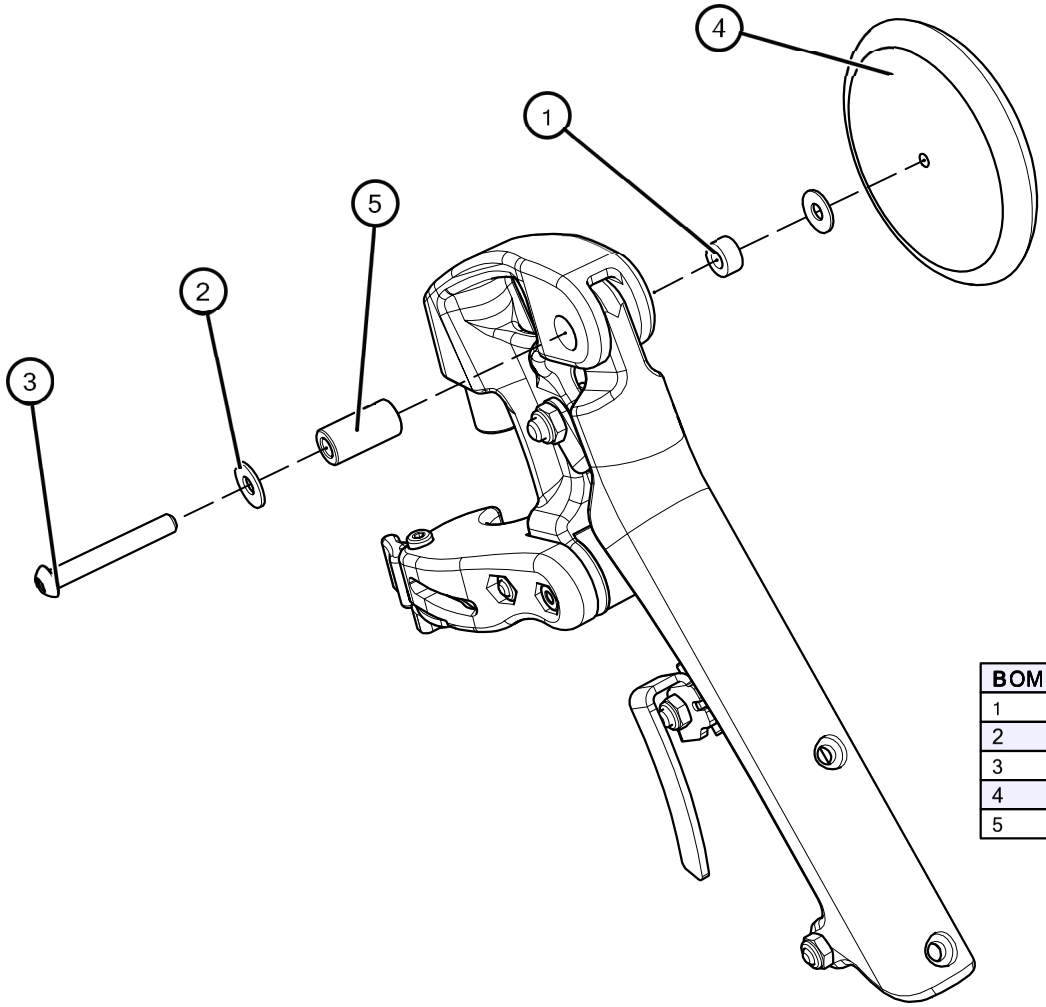

BOM ID	Description	Qty	PartNo
1	1/4" ID x 1/2" OD x 1/4" L black nylon spacer	1	1420
2	1/4" ID x 5/8" OD x 3/64" Washer - Steel - Black Zinc	2	1425
3	1/4-20x 1 3/4" Socket Button Head - Black Zinc	1	13392
4	Gel Knee Protector (ELRs) - pad	1	9325
5	Oil Lite Bushing - 1/4" ID x 1/2" OD x 1" L	1	9326

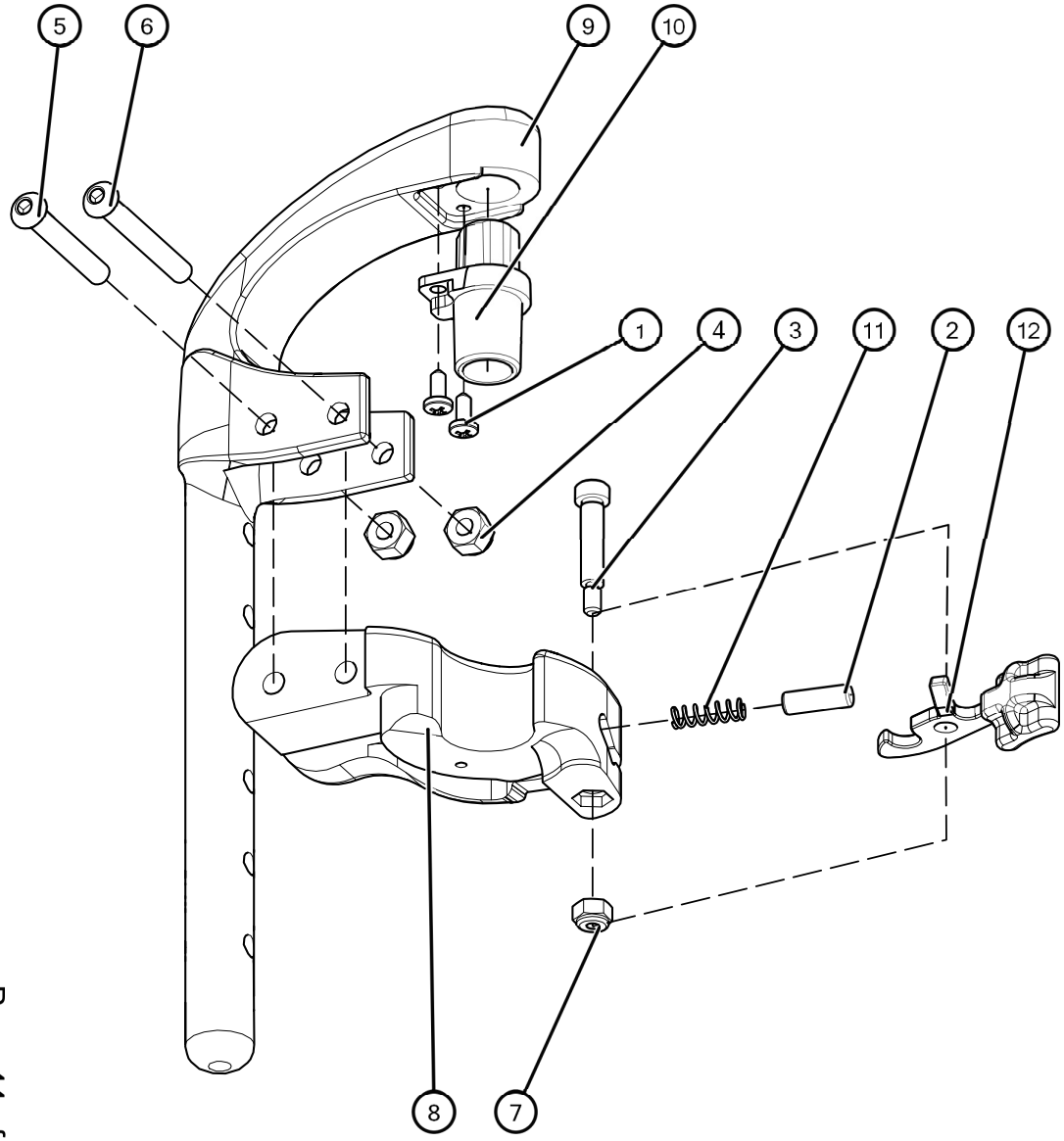

Title: 90 Degree Swing Away Front Hanger
Document : 15044
Revision: 0
Date: June 2014

BOM ID	Description	Qty	PartNo
1	# 8 x 3/8" self-tapping phillips pan head screw	2	2549
2	1/4" x 3/4" Plastic Dowel Pin	1	6279
3	1/4"x1" Socket Head Shoulder Bolt - Black Zinc	1	3624
4	1/4-20 Nylon Locknut - Thick - Black Zinc	2	1390
5	1/4-20x 1 3/4" Socket Button Head - Black Zinc	1	2685
6	1/4-20x 2" Socket Button Head - Black Zinc	1	3628
7	10-24 Nylon Locknut - Thick - Black Zinc	1	1388
8	Front Rigging - Latch Mount	1	Pick Side
8.1	Front Rigging - Latch Mount - LH	1	6779
8.2	Front Rigging - Latch Mount - RH	1	6780
9	Front Rigging Hanger - 90 Deg	1	7660
10	Hanger Pivot Pin	1	6781
11	Spring - Coil - 0.24" OD x 1.00" L x 11.4 lbs/in	1	6344
12	Front Rigging - Catch	1	Pick Side
12.1	Front Rigging - Catch - LH	1	7153
12.2	Front Rigging - Catch - RH	1	7044

Title: Composite Footplate and Lower Extension
Document: 15034
Revision: 0
Date: January 2014

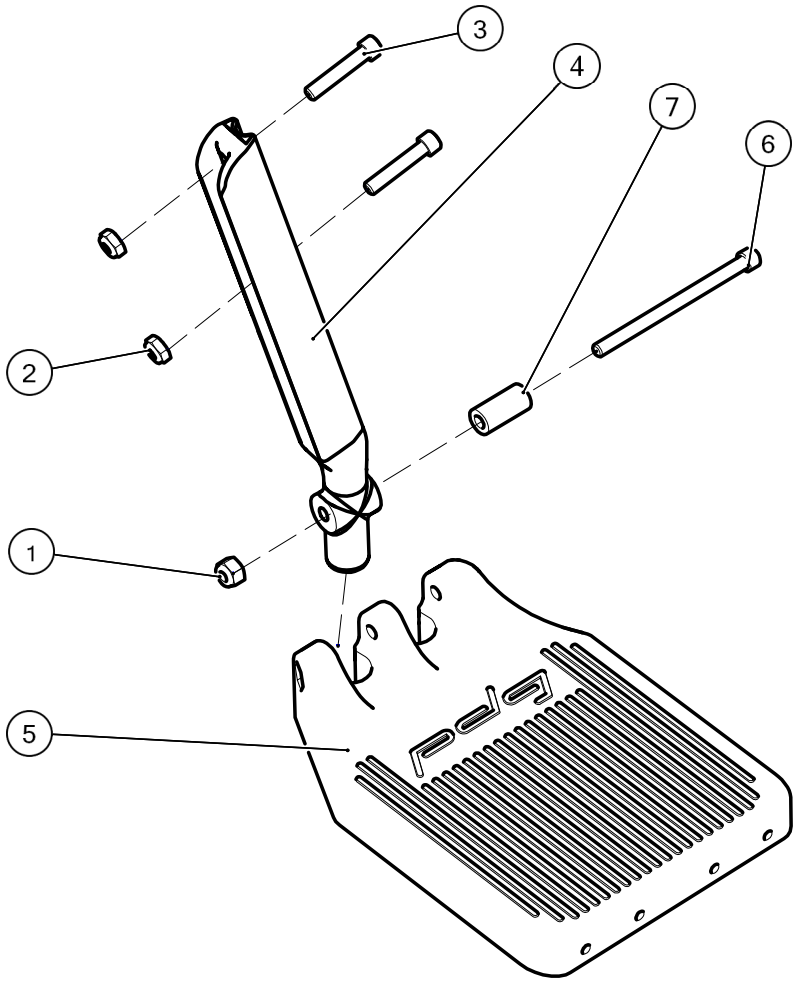

BOM ID	Description	Qty	PartNo
1	1/4-20 Nylon Locknut - Thick - Black Zinc	1	1319
2	1/4-20 Nylon Locknut - Thin - Black Zinc	2	1391
3	1/4-20 x 1-1/4" socket head cap screw - Black Zinc	2	6345
4	Front Rigging - Extension	1	Pick Size
4.1	Front Rigging - Extension - Regular	1	6341
4.2	Front Rigging - Extension - Long	1	6342
5	Foot Plate - Composite	1	Pick Size
5.1	Foot Plate - Composite - Short	1	5968
5.2	Foot Plate - Composite - Medium	1	5969
5.3	Foot Plate - Composite - Long	1	5970
6	1/4-20 x 3-1/2" socket head cap screw - Black Zinc	1	1698
7	1/4" ID x 1/2" OD x 1" L black nylon spacer	1	1422

Title: Angle Adjustable Foot Plate and Lower Extension
Document: 15012
Revision: 0
Date: January 2014

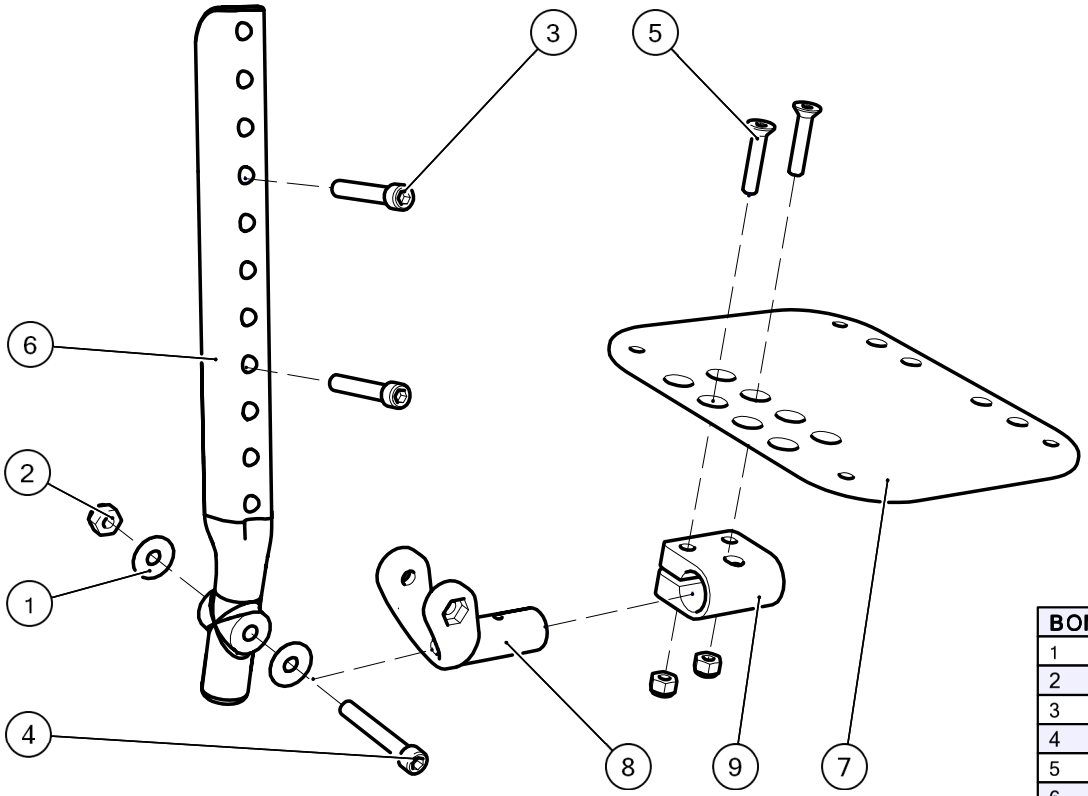

BOM ID	Description	Qty	PartNo
1	1/4" x 3/4" x 0.031" Thick Flat Nylon Washer	2	6109
2	1/4-20 Nylon Locknut - Thick - Black Zinc	5	1319
3	1/4-20 x 1-1/2" Socket Head Cap Screw - Black Zinc	2	6345
4	1/4-20 x 1-3/4" Socket Head Cap Screw - Black Zinc	1	6108
5	1/4-28 x 1-1/4" flat head cap screw - black zinc	2	15758
6	Front Rigging - Extension	1	Pick Size
6.1	Front Rigging - Extension - Regular	1	7894
6.2	Front Rigging - Extension - Long	1	7893
7	Angle Adjustable Footplate	1	Pick Size
7.1	Angle Adjustable Footplate - Small	1	7023
7.2	Angle Adjustable Footplate - Medium	1	7024
7.3	Angle Adjustable Footplate - Large	1	7025
7.4	Angle Adjustable Footplate - Extra Large	1	7578
7.5	Angle Adjustable Footplate - Oversized	1	7026
8	Foot Plate - Angle Adjustable - Knuckle	1	7579
9	Foot Plate - Angle Adjustable Clamp	1	7029

Title : ELR and Heel Loop Assembly
Document: 13098
Revision: 3
Date: July 2015

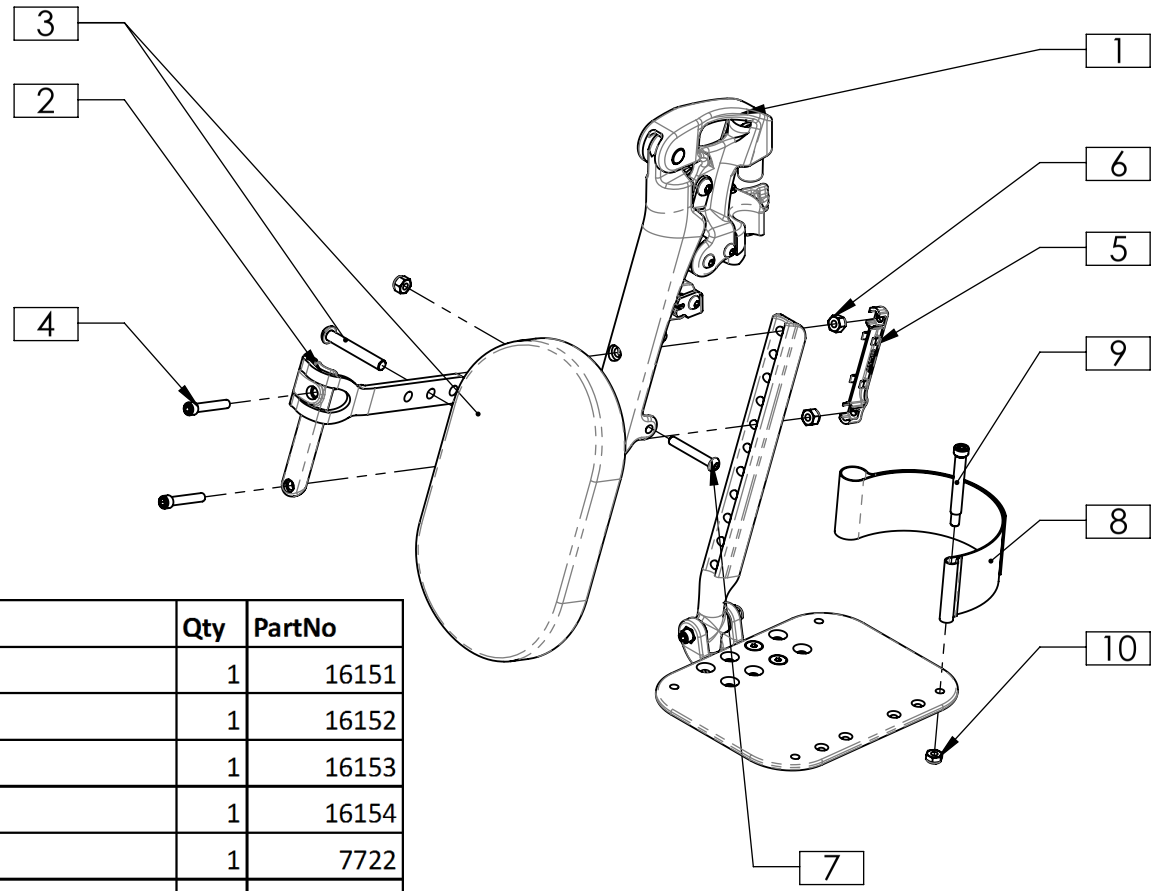

BOM ID	Description	Qty	PartNo
1.1	ELR Assembly (Grey) - Left	1	16151
1.2	ELR Assembly (Grey) - Right	1	16152
1.3	ELR Assembly (Black) - Left	1	16153
1.4	ELR Assembly (Black) - Right	1	16154
2.1	Calf Pad Hanger Assembly - Left	1	7722
2.2	Calf Pad Hanger Assembly - Right	1	7726
3.1	Large Calf Pad Assembly	1	16443
3.2	HD Calf Pad Assembly	1	16330
3.3	Small Calf Pad Assembly	1	9225
4	1/4-20 x 1-1/2" Socket Head Cap Screw - Black Zinc	2	13344
5	Front Rigging - Extension Nut Retainer	1	14818
6	1/4-20 Nylon Locknut - Thick - Black Zinc	3	1319
7	1/4-20x 1 3/4" Socket Button Head - Black Zinc	1	13392
8	Heel Loop - Adjustable Length	1	10590
9	5/16" x 2" x 1/4-20 Socket Head Shoulder Bolt	1	16398
10	1/4-20 Nylon Locknut - Thin - Black Zinc	1	1391

Seat Width	Calf Pad Selection
12"	No Calf Pad
13"-15"	Small
16"-24"	Large
25"+	HD

12 11 10 9 8 7 6 5 4 3 2 1

Title: Plug-in Footrest Assembly
Document: 13059
Revision: 0
Date: July 2015

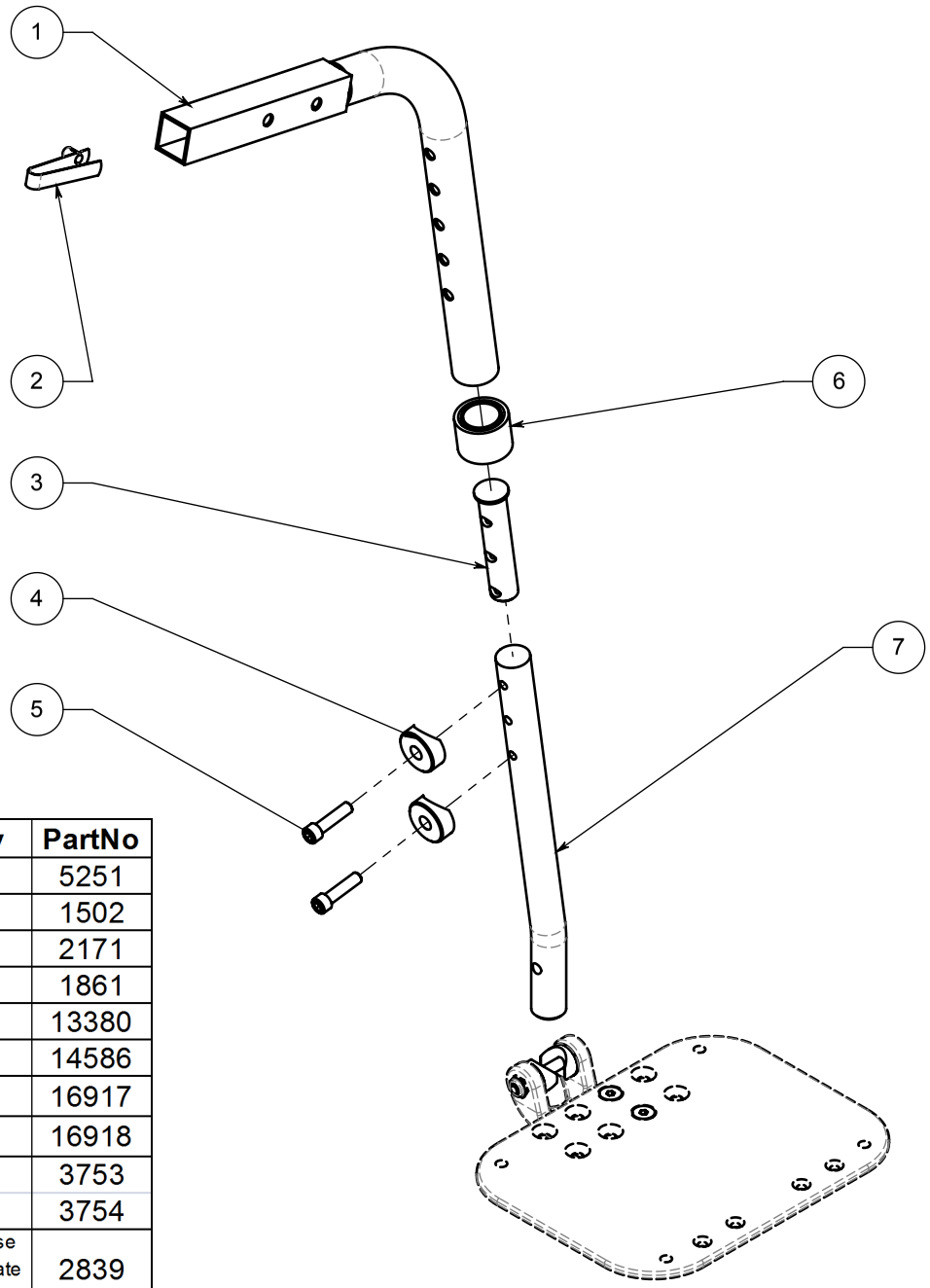

BOM ID	Description	Qty	PartNo
1	Plug In Upper Footrest FAB	1	5251
2	Snap Button (Single)	1	1502
3	Foot Rest Plug	1	2171
4	5/16" ID x 1" Tube Coved Washer - Steel	2	1861
5	1/4-20 x 1" socket head cap screw - Black Zinc	2	13380
6	Plug in Footrest Anti-rattle Cap	1	14586
7.1	Extension tube for Plug in Front Rigging (15-19")	1	16917
7.2	Extension tube for Plug in Front Rigging (13-17")	1	16918
7.3	Extension for Plug in - Solid (13-17)	1	3753
7.4	Extension for Plug in - Solid (15-19)	1	3754
1-7	Plug in footrest w/AA Footplate - Pair - ASSEMBLY	Choose Footplate and Size	2839
1-7	Bentley/Stellar plug in footrest w/ Composite Footplate - Pair - ASSEMBLY	Choose Footplate and Size	2031

Rev	Revision description	ECO#
9	Updated to include short front rigging options and information on leg lengths	1522

PDG Plug-In															
Seat Height	12.0"	13.0"	14.0"		15.0"	16.0"		17.0"		18.0"		19.0"		20.0"	
Leg Length (Assuming 3" Cushion)*	14.6"	14.6"	14.5"	16.2"	16.2"	17.1"	17.9"	18.1"	18.8"	19.2"	19.9"	19.2"	20.9"	19.2"	20.9"
Type Front Rigging Extension	Short	Short	Short	Regular	Regular	Regular	Long	Regular	Long	Regular	Long	Regular	Long	Regular	Long
Position Reference Hole	a2 & b1	a2 & b1	a2 & b1	a3 & c1	a3 & c1	b3 & d1	a3 & c1	c3 & e1	b3 & d1	d3 & e2	c3 & e1	d3 & e2	d3 & e2	d3 & e2	d3 & e2
Ground Clearance at Footplate (in)	1.3	2.3	3.4	1.8	2.8	2.9	2.2	3.0	2.3	3.0	2.3	4.0	2.4	5.0	3.4

*Leg length is the distance from the inner knee to the bottom heel

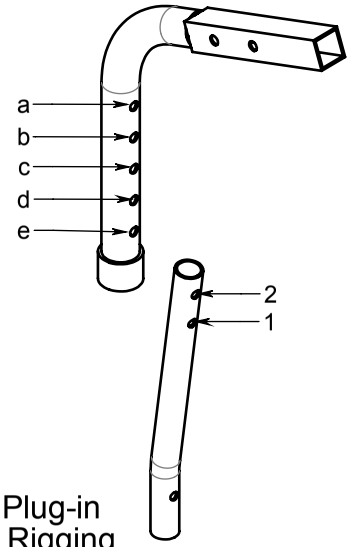

PDG Plug-in
Front Rigging
Short (55429 & 55797)

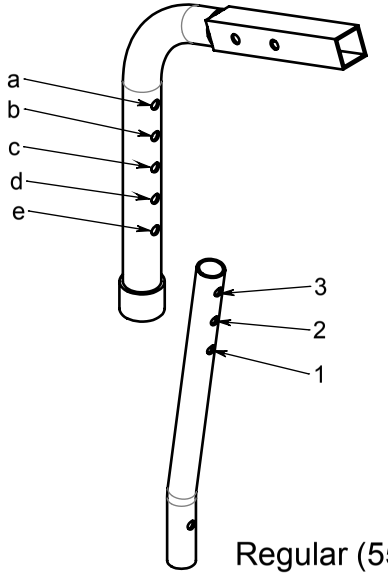

PDG Plug-In
Front Rigging
Regular (55063 & 55090)

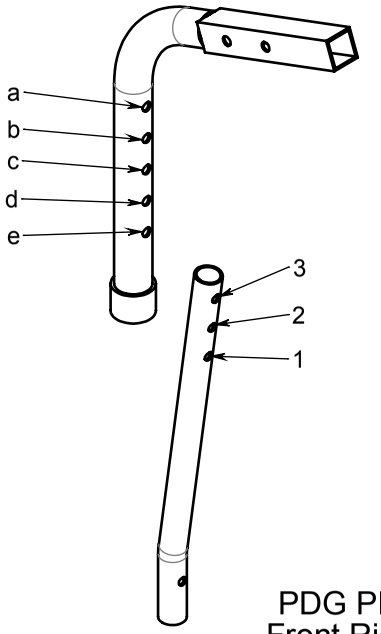

PDG Plug-In
Front Rigging
Long (55063 & 55090)

CUS: [ ]

PDG part number	Author	Technical reference	Revised by	Approved by
NA	Julie Belanger	NA	Keira Lane	Torr Brown

pdg®	Title: Front Rigging Setup Chart		File name (Drawing #) 85028	Status NA
© 2010 The information contained in this drawing is the sole property of PDG Mobility	Third angle projection	Tolerances unless otherwise stated: Angular: +/- 1° Othe x +/-0.8, x.x+/-0.4, x.xx+/-0.15	Units [mm]	Sheet 1 of 2 / Date of Issue Jun 27 2016 / Revision 9

Dimensioning and Tolerancing Standard ASME Y14.5-2009

Rev	Revision description	ECO#
9	Updated to include short front rigging options and information on leg lengths	1522

PDG Swing-Away Front Rigging

Seat Height	10.0" *	11.0" *	12.0" *	13.0"		14.0"	15.0"		16.0"		17.0"		18.0"		19.0"		20.0"	
Leg Length (Assuming 3" Cushion)**	10.6"	12.4"	13.1"	13.8"	14.6"	15.3"	16.1"	16.8"	17.6"	17.6"	18.3"	18.3"	19.1"	19.8"	19.1"	20.6"	19.1"	21.3"
Type Front Rigging Extension	Short	Short	Short	Short	Regular	Regular	Regular	Long	Regular	Long	Regular	Long	Regular	Long	Regular	Long	Regular	Long
Position Reference Hole	4 & 7	3 & 6	2 & 5	1 & 4	7 & 11	6 & 10	5 & 9	7 & 11	3 & 7	6 & 10	2 & 6	5 & 9	1 & 5	3 & 7	1 & 5	2 & 6	1 & 5	1 & 5
Ground Clearance at Footplate	3.0	2.4	2.7	3.0	2.3	2.6	2.9	2.2	2.5	2.5	2.8	2.8	3.1	2.4	4.1	2.7	5.1	3.0

*Please note is is NOT a standard offering

**Leg length is the distance from the inner knee to the bottom heel

Front Rigging Hanger
70 deg - Short (90399)
Please note this is not a standard offering

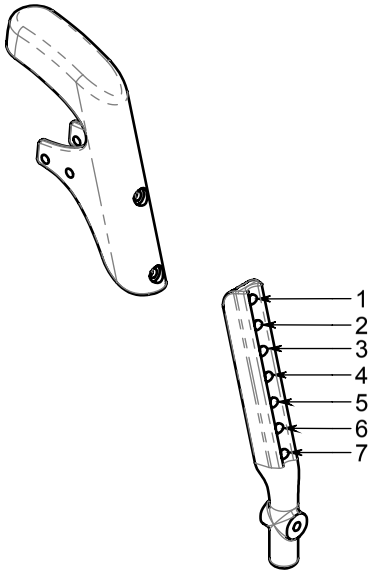

PDG Swing-Away
Front Rigging
Extension - Short

Front Rigging Hanger
70 deg (68261)

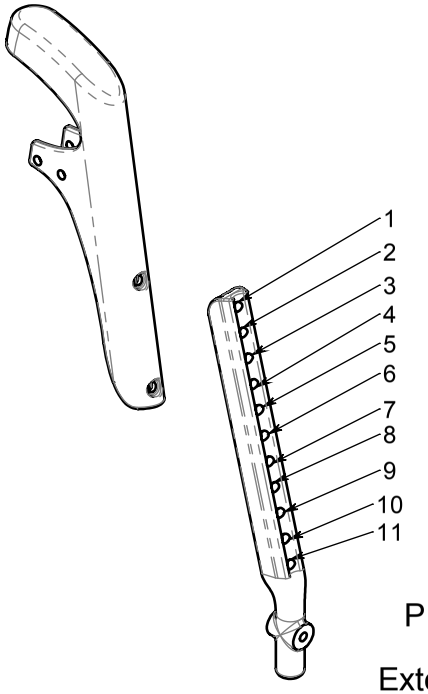

PDG Swing-Away
Front Rigging
Extension - Regular

Front Rigging Hanger
70 deg (68261)

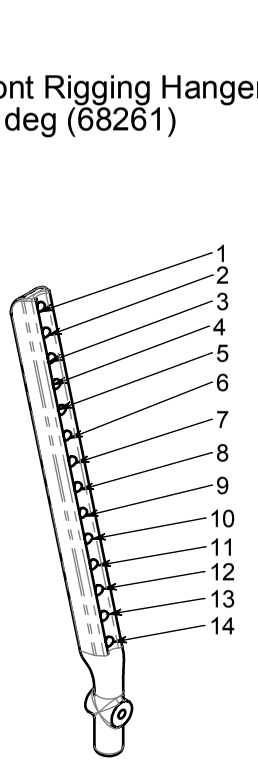

PDG Swing-Away Front Rigging
Extension - Long

PDG part number	Author	Technical reference	Revised by	Approved by
NA	Julie Belanger	NA	Keira Lane	Torr Brown

Title:	File name (Drawing #)	Status
Front Rigging Setup Chart	85028	NA

© 2010 The information contained in this drawing is the sole property of PDG Mobility

Third angle projection

Tolerances unless otherwise stated:
Angular: +/- 1°
Othe x +/-0.8, x.x+/-0.4, x.xx+/-0.15

Units	Sheet	Date of Issue	Revision
[mm]	2 of 2	Jun 27 2016	9

Dimensioning and Tolerancing Standard ASME Y14.5-2009

Fuze T20 - Dual Post Arm Rest Set up Chart

T20 Seat Rail - Front Segment (Regular or Plug-in)

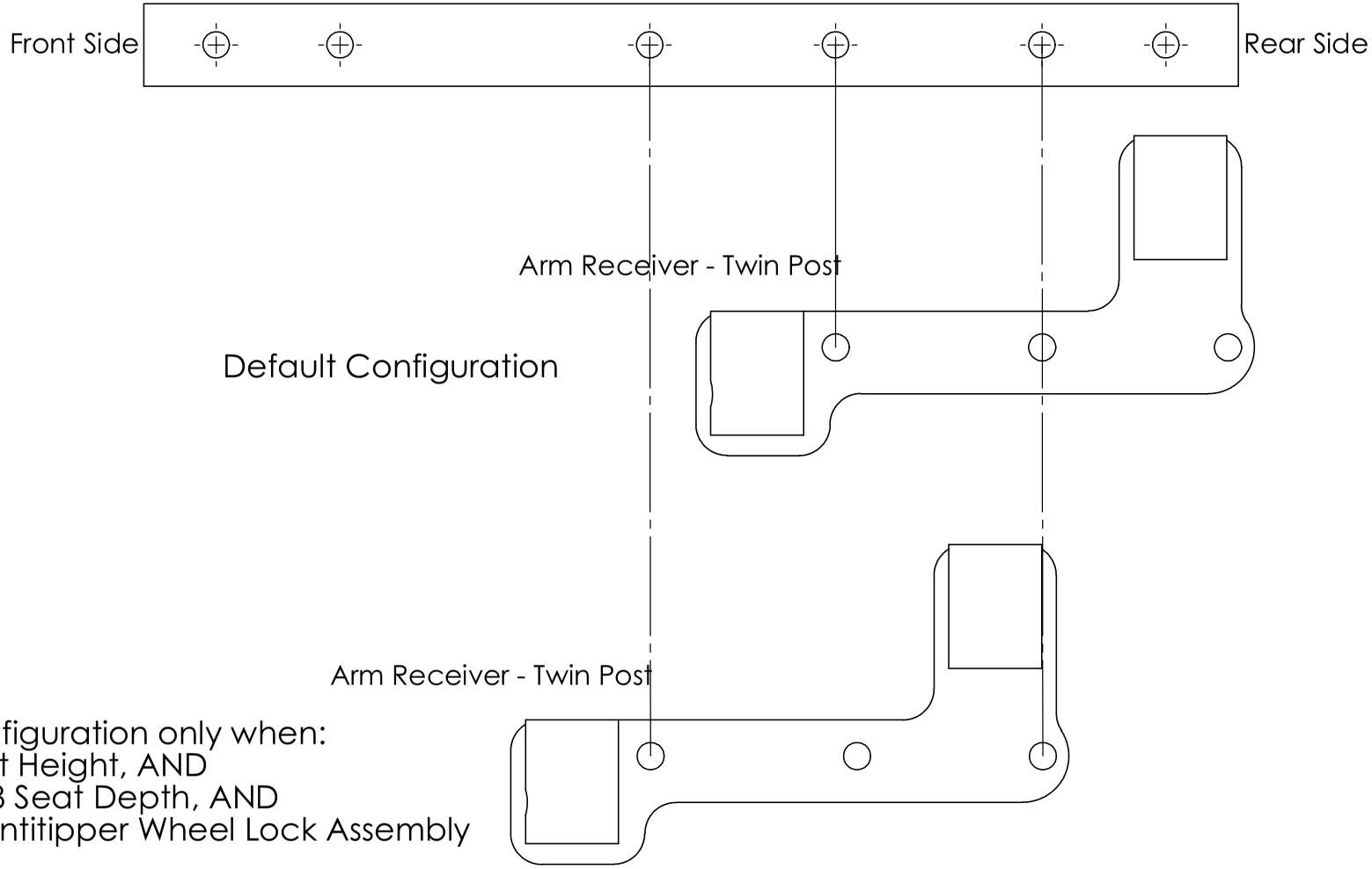

Use this configuration only when:

- 13" Seat Height, AND
- 16 to 18 Seat Depth, AND
- 20-24 Antitipper Wheel Lock Assembly

Rev	Revision description	ECO#
2	Item 3 is revised with new thickness 3/16"	1346

ITEM NO.	QTY.	DESCRIPTION
1	1	Upper Frame Seating Block
2	4	5/16" ID x 1" Tube Coved Washer - Steel
4	1	Upper Frame Mounting Block
3	2	Steel Round Spacer 5/16"ID x 5/8"OD x 3/16" L

Seat depths 15" and 16"

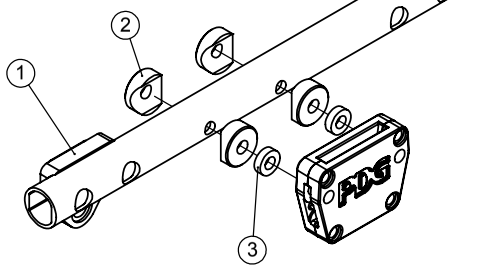

Seat depth 17" and 18"
* Set Armrest 1" higher

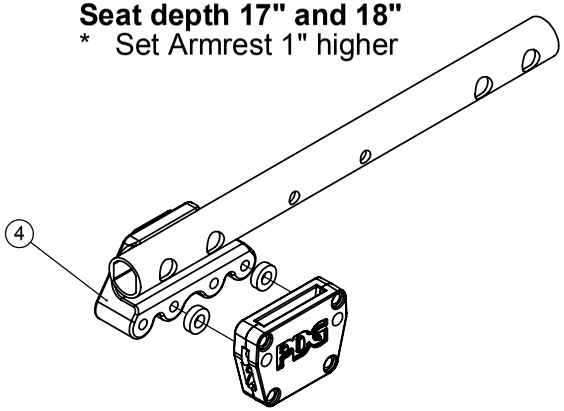

Seat depths 19" and 20"
* Set Armrest 1" higher

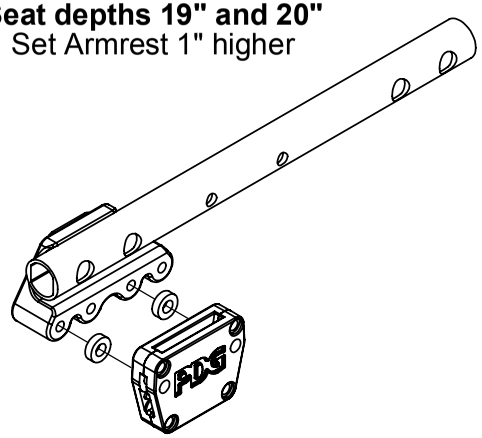

See drawing 13151 Setup B for Full Length arm pad assembly.
See drawing 13152 Setup A for Desk Length arm pad assembly.

PDG part number	Author	Technical reference	Revised by	Approved by
	DZ	MJ	DZ	TB

Title: Fuze T20 NARROW Adjustable T-Style Armrest Setup Chart

File name (Drawing #): 85015

Status

© 2010 The information contained in this drawing is the sole property of PDG Mobility

Third angle projection

Tolerances unless otherwise stated:

Units

Sheet 1 of 1

Date of Issue 2012/08/16

Revision 2

Dimensioning and Tolerancing Standard ASME Y14.5-2009

Rev	Revision description	ECO#
6	Item 3 is revised with new thickness 3/16"	1346

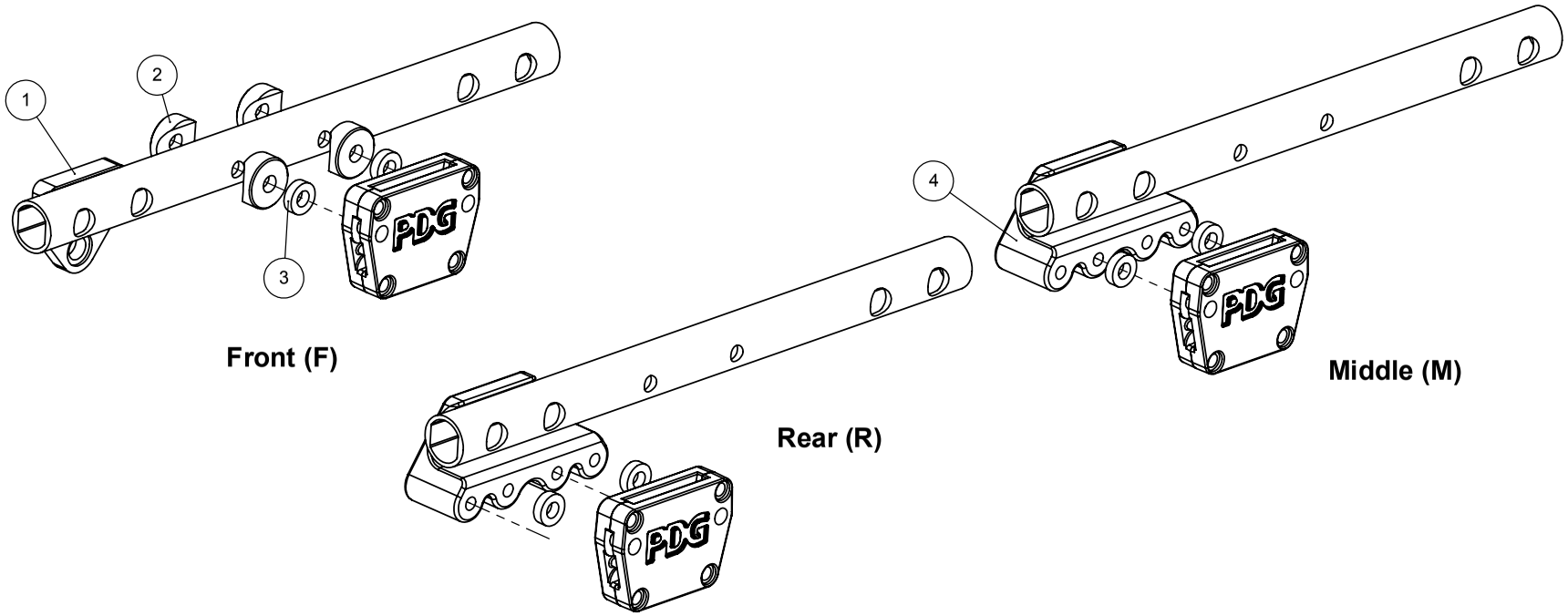

Seat Depth							
Arm Type	15"	16"	17"@96° BA	17"@90° BA	18"	19"	20"
Full	F(A)	F(A)	M(C)	M(B)	R(C)	R(B)	R(A)
Desk	F(A)	M(B)	M(A)	M(A)	M(A)	R(A)	R(A)
Gel Arm	F(A)	F(A)	M(A)	M(A)	M(A)	R(A)	R(A)

Note: Refer drawings 13151, 13152 and 13153 for A,B,C.
BA = Back Angle

ITEM NO.	QTY.	DESCRIPTION
1	1	Upper Frame Seating Block
2	4	5/16" ID x 1" Tube Coved Washer - Steel
3	2	Steel Round Spacer 5/16"ID x 5/8"OD x 3/16" L
4	1	Upper Frame Mounting Block

PDG part number	Author	Technical reference	Revised by	Approved by
	DZ	MJ	DZ	TB

Title: Fuze T20 Adjustable T-Style Armrest Setup Chart

File name (Drawing #): 85016

Status

© 2010 The information contained in this drawing is the sole property of PDG Mobility

Third angle projection

Tolerances unless otherwise stated:

Units

Sheet 1 of 1

Date of Issue Feb 04,2013

Revision 6

Dimensioning and Tolerancing Standard ASME Y14.5-2009

Bill of Materials T-Style Armrest, Armpad - "T" Style Armpad

ITEM NO.	QTY.	PART NO.	DESCRIPTION
1	1	(4019) / 4020	Armrest - T Style Assembly - Right
2	1	4021	Armpad - "T" Style
3			*Use fasteners included with Arm Pad*

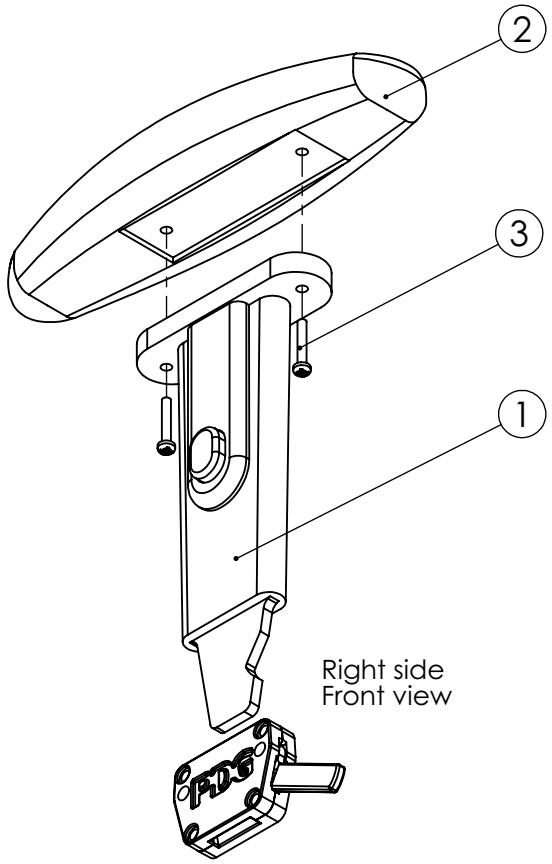

Armpad - "T" Style

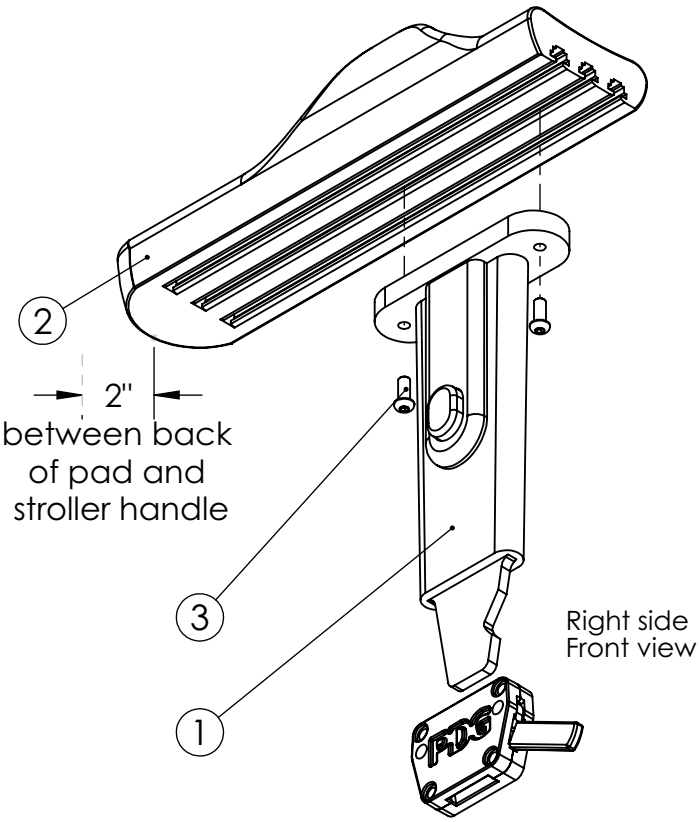

Contour Arm Trough

Bill of Materials T-Style Armrest, Contour Arm Trough

ITEM NO.	QTY.	PART NO.	DESCRIPTION
1	1	(4019) / 4020	Armrest - T Style Assembly - Right
2	1	(3151) / 3152	Contour Arm Trough - Right
3			*Use fasteners included with Arm Pad*

Bill of Materials T-Style Armrest, Armrest Pad Desk Length

ITEM NO.	QTY.	PART NO.	DESCRIPTION
1	1	(4019) / 4020	Armrest - T Style Assembly - Right
2	1	1505	Armrest Pad Desk Length
3	1	5721	Armrest Adapter Base - T-Style
4	1	5720	Armrest Adapter Tube - T-style Desk
5	2	1617	Tube Cap 7/8 round
6	2	1398	10-32 x 1-1/4" phillips pan head, cutting
7	4	1406	1/4-20x5/8 Socket ButtonH CS

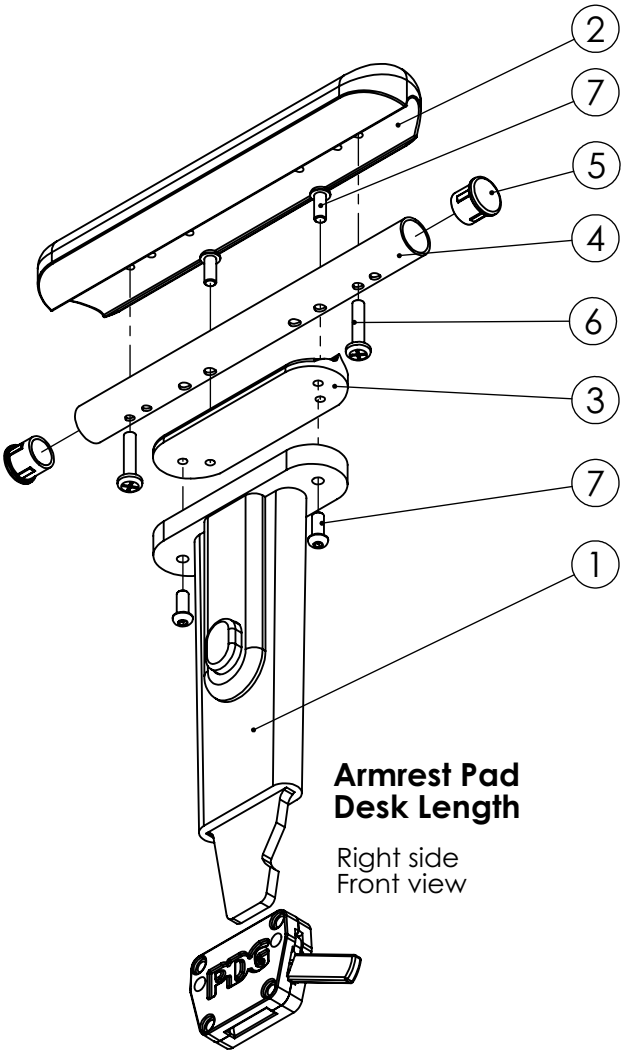

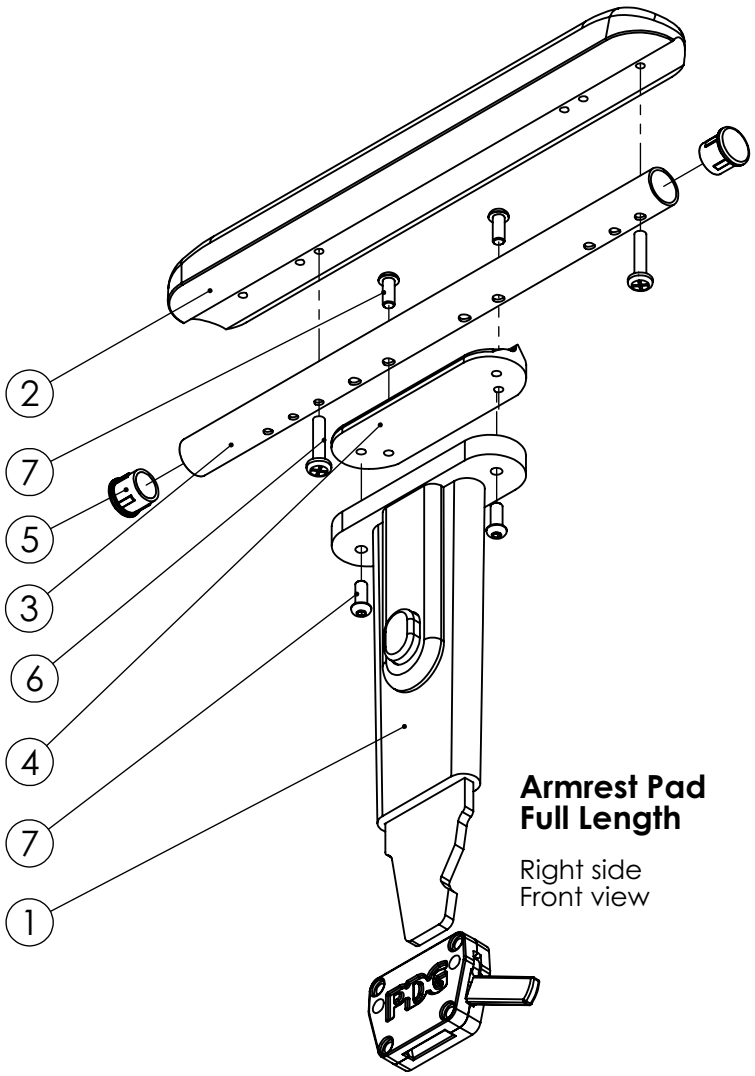

Bill of Materials T-Style Armrest, Armrest Pad Full Length

ITEM NO.	QTY.	PART NO.	DESCRIPTION
1	1	(4019) / 4020	Armrest - T Style Assembly - Right
2	1	1504	Armrest Pad Full Length
3	1	5719	Armrest Adapter Tube - T-style Std.
4	1	5721	Armrest Adapter Base - T-Style
5	2	1617	Tube Cap 7/8 round
6	2	1398	10-32 x 1-1/4" phillips pan head, cutting
7	4	1406	1/4-20x5/8 Socket ButtonH CS

Bill of Materials T-style Armrest, 3" wide Desk Length Arm Pad

ITEM NO.	QTY.	PART NO.	DESCRIPTION
1	1	(4019)/4020	Armrest - T Style Assembly - Right
2	1	5721	Armrest Adapter Base - T-Style
3	1	5720	Armrest Adapter Tube - T-style Desk
4	1	2274	Armrest pad - 3" wide - Desk Length
5	2	1617	Tube Cap 7/8 round
6	2	1401	10-32 x 1-1/2" socket head cap screw
7	4	1406	1/4-20x5/8 Socket ButtonH CS
8	2	1432	#8 finishing washer

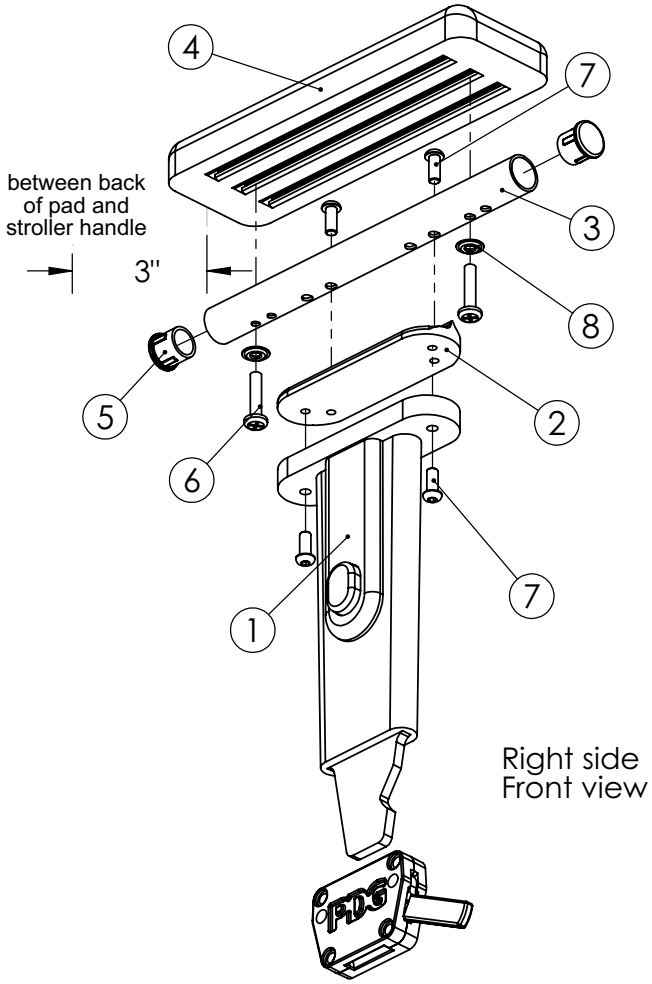

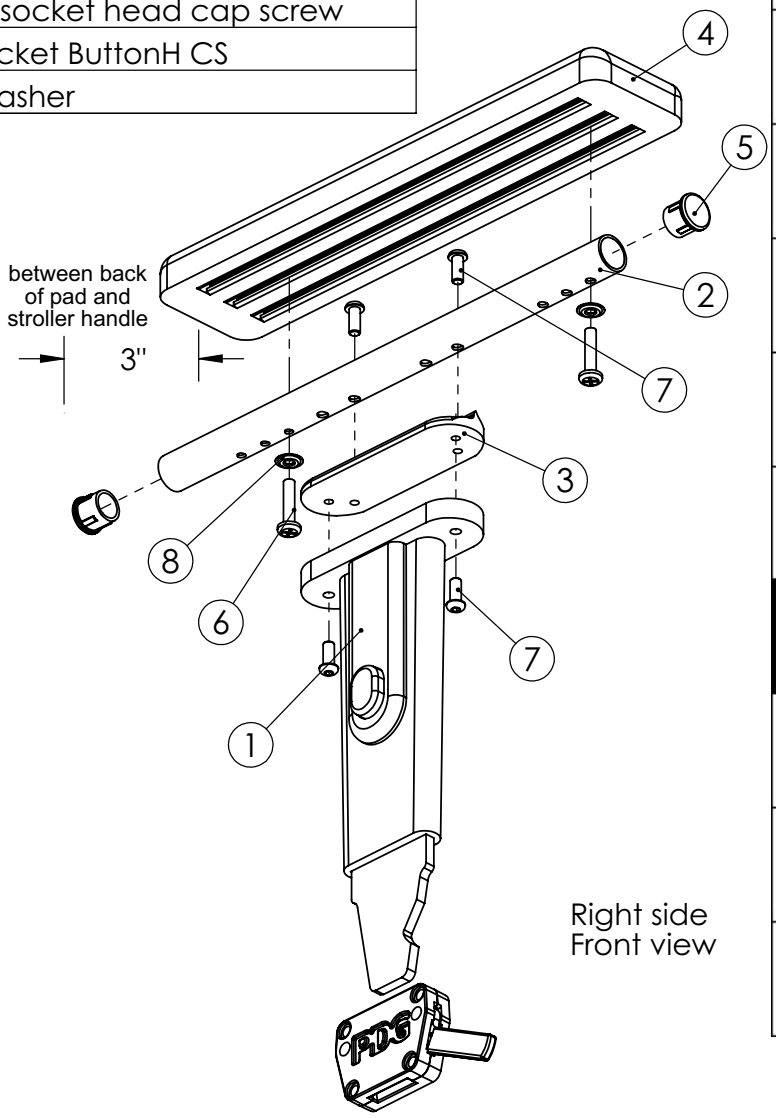

Bill of Materials T-style Armrest, 3" wide Full Length Arm Pad

ITEM NO.	QTY.	PART NO.	DESCRIPTION
1	1	(4019)/4020	Armrest - T Style Assembly - Right
2	1	5719	Armrest Adapter Tube - T-style Std.
3	1	5721	Armrest Adapter Base - T-Style
4	1	2275	Armrest pad - 3" wide - Full Length
5	2	1617	Tube Cap 7/8 round
6	2	1401	10-32 x 1-1/2" socket head cap screw
7	4	1406	1/4-20x5/8 Socket ButtonH CS
8	2	1432	#8 finishing washer

Bill of Materials T-Style Armrest, 2" wide Gel Pad

ITEM NO.	QTY.	PART NO.	DESCRIPTION
1	1	(4019) / 4020	Armrest - T Style Assembly - Right
2	1	5721	Armrest Adapter Base - T-Style
3	1	5102	Gel Armrests 2" x 12"
4	2	1617	Tube Cap 7/8 round
5	1	6103	Armrest Adapter Tube Gel Pad- T-style
6	2	2806	10-32 x 1-1/4" Socket Head CS
7	4	1406	1/4-20x5/8 Socket ButtonH CS

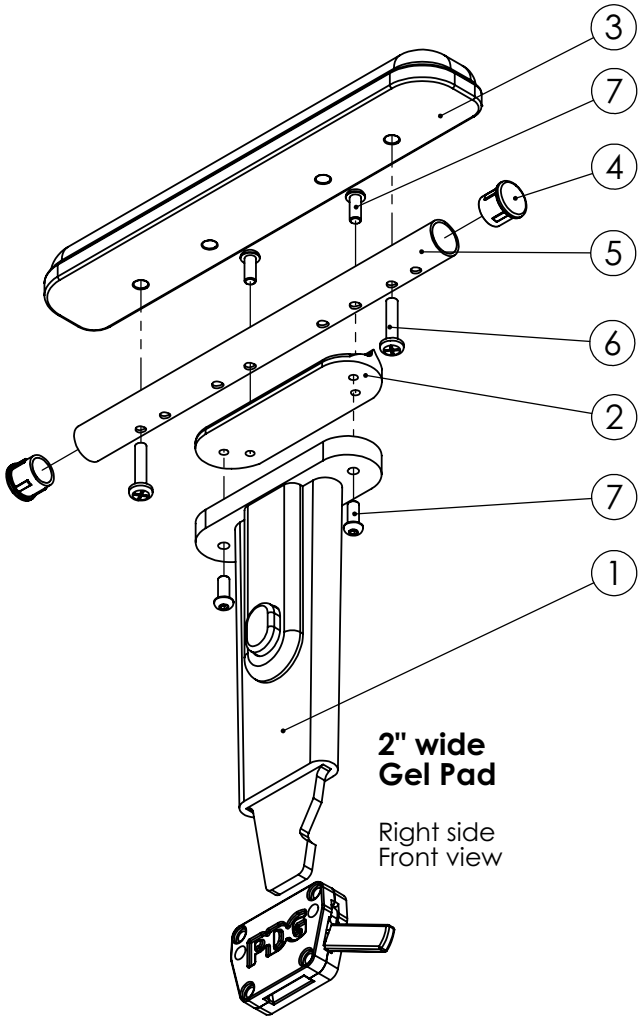

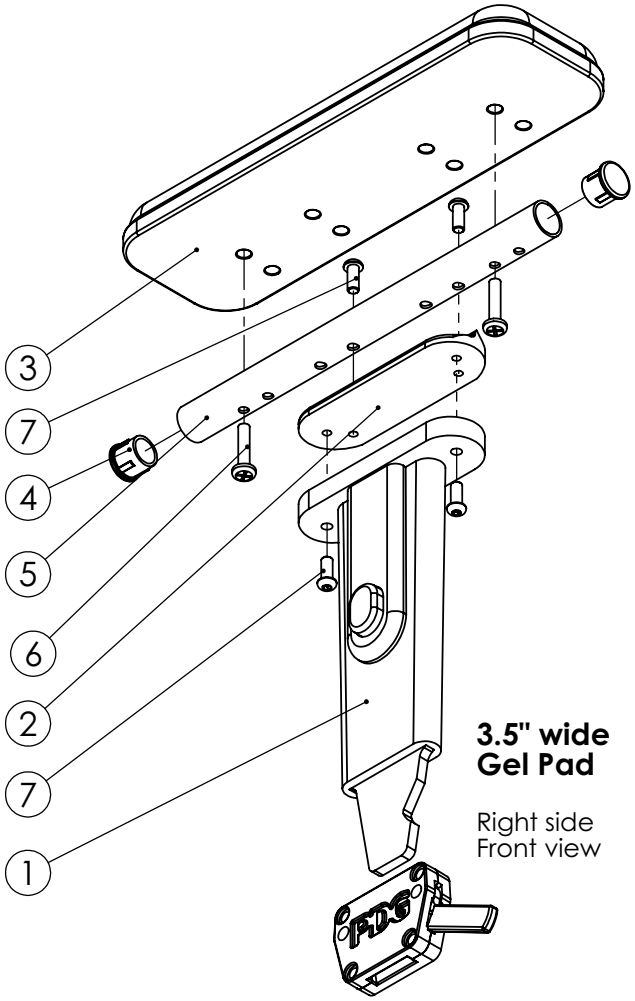

Bill of Materials T-Style Armrest, 3.5" wide Gel Pad

ITEM NO.	QTY.	PART NO.	DESCRIPTION
1	1	(4019) / 4020	Armrest - T Style Assembly - Right
2	1	5721	Armrest Adapter Base - T-Style
3	1	5101	Gel Armrests 3.5" x 12"
4	2	1617	Tube Cap 7/8 round
5	1	6103	Armrest Adapter Tube Gel Pad- T-style
6	2	2806	10-32 x 1-1/4" Socket Head CS
7	4	1406	1/4-20x5/8 Socket ButtonH CS

Fuze Astrotilt Arm Rest Setup Chart for Flip-up and Rigid Arm Rests

Arm rest height	9"	10"	11"	12"	13"	14"
Arm rest reference holes	1&2	2&3	3&4	4&5	5&6	6&7

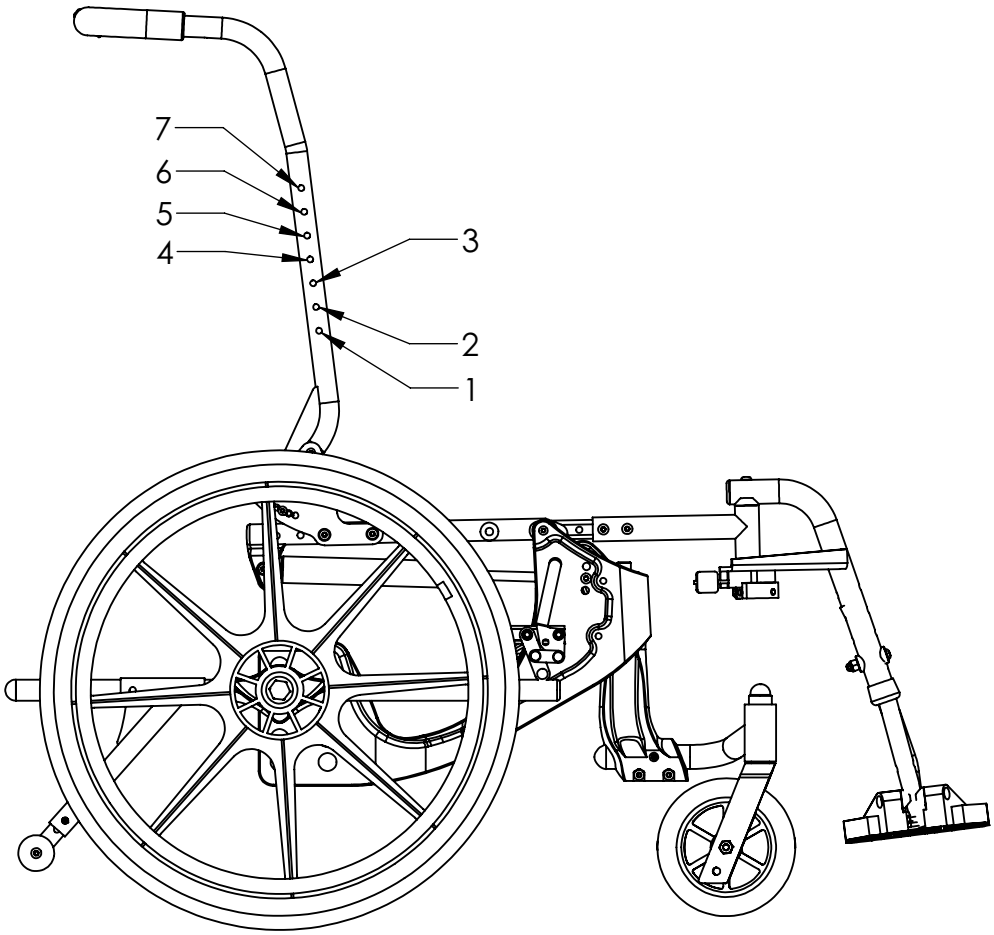

Bill of Materials Flip-up Armrest, Armrest Pad Full Length

ITEM NO.	QTY.	PART NO.	DESCRIPTION
1	1	5915	Armrest - Receiver Tube
2	1	5916	Armrest - Insert Tube
3	1	5917	Armrest - End Tube
4	1	1617	Tube Cap 7/8 round
5	2	1398	10-32 x 1-1/4" phillips pan head, cutting
6	1	1504	Armrest Pad Full Length

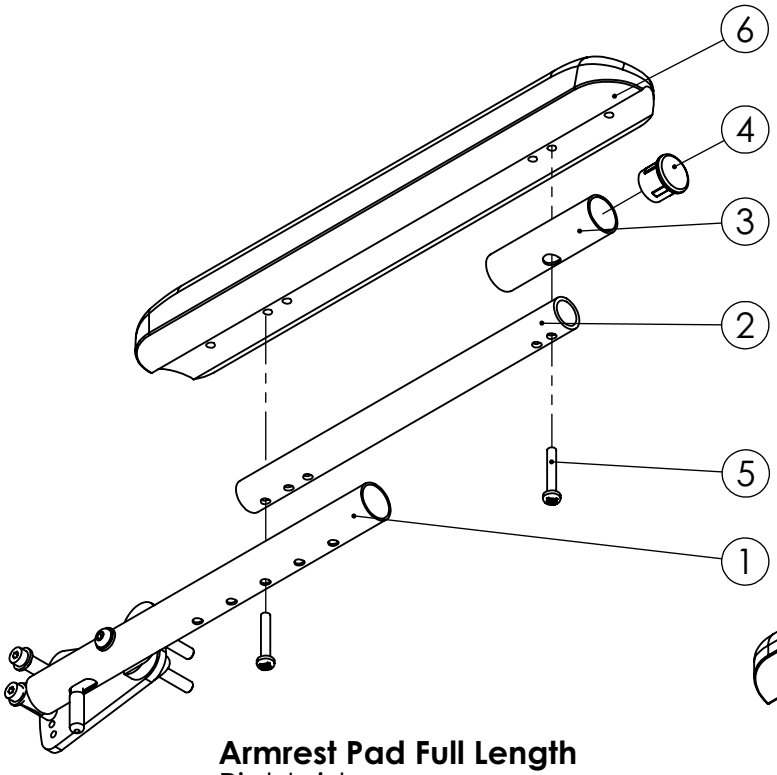

Armrest Pad Full Length
Right side

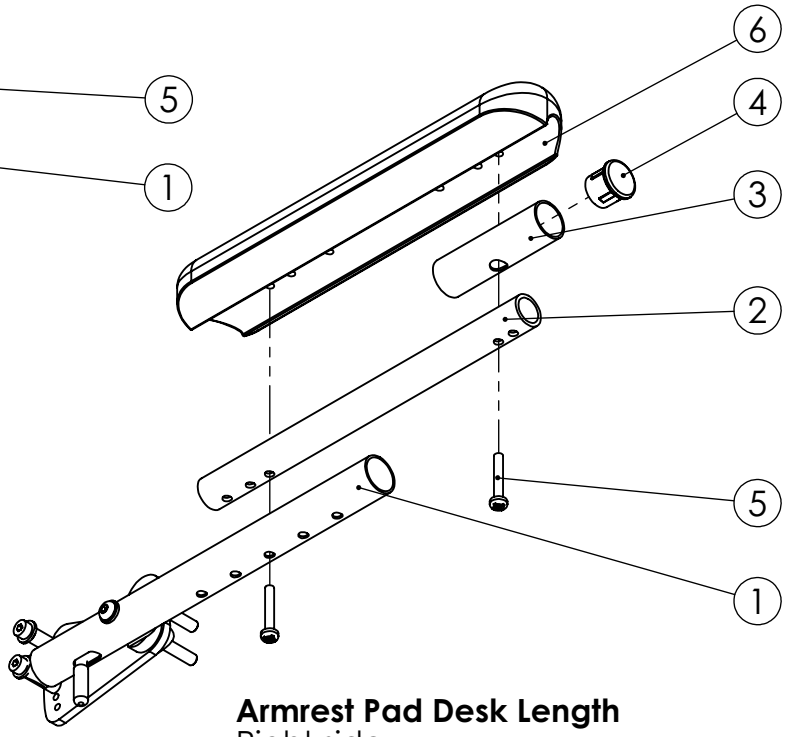

Armrest Pad Desk Length
Right side

Bill of Materials Flip-up Armrest, Armrest Pad Desk Length

ITEM NO.	QTY.	PART NO.	DESCRIPTION
1	1	5915	Armrest - Receiver Tube
2	1	5916	Armrest - Insert Tube
3	1	5917	Armrest - End Tube
4	1	1617	Tube Cap 7/8 round
5	2	1398	10-32 x 1-1/4" phillips pan head, cutting
6	1	1505	Armrest Pad Desk Length

Bill of Materials Flip-up Armrest, Armrest Pad - 3" wide - Desk Length

ITEM NO.	QTY.	PART NO.	DESCRIPTION
1	1	5915	Armrest - Receiver Tube
2	1	5916	Armrest - Insert Tube
3	1	5917	Armrest - End Tube
4	1	1617	Tube Cap 7/8 round
5			*Use fasteners included with Arm Pad*
6	1	2274	Armrest pad - 3" wide - Desk Length

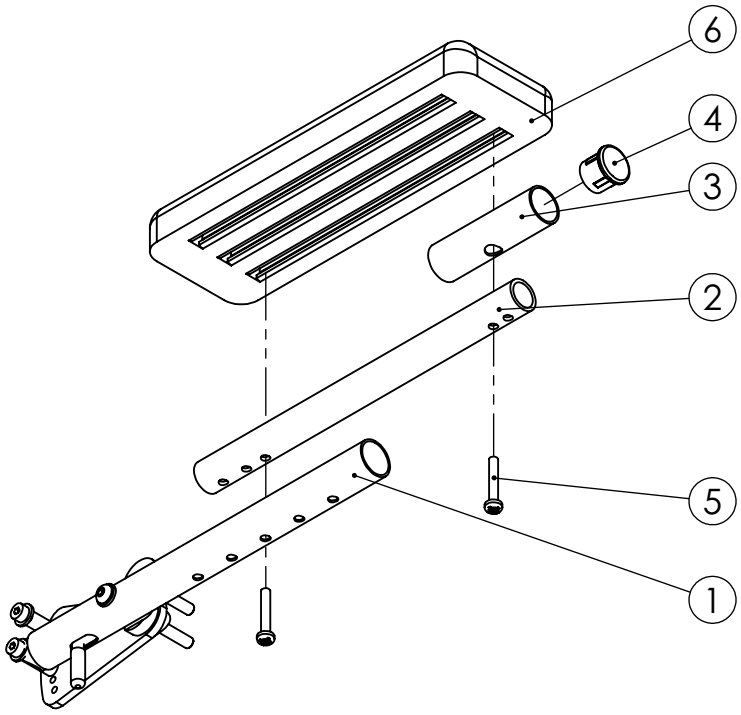

Armrest Pad - 3" wide- Desk Length
Right side

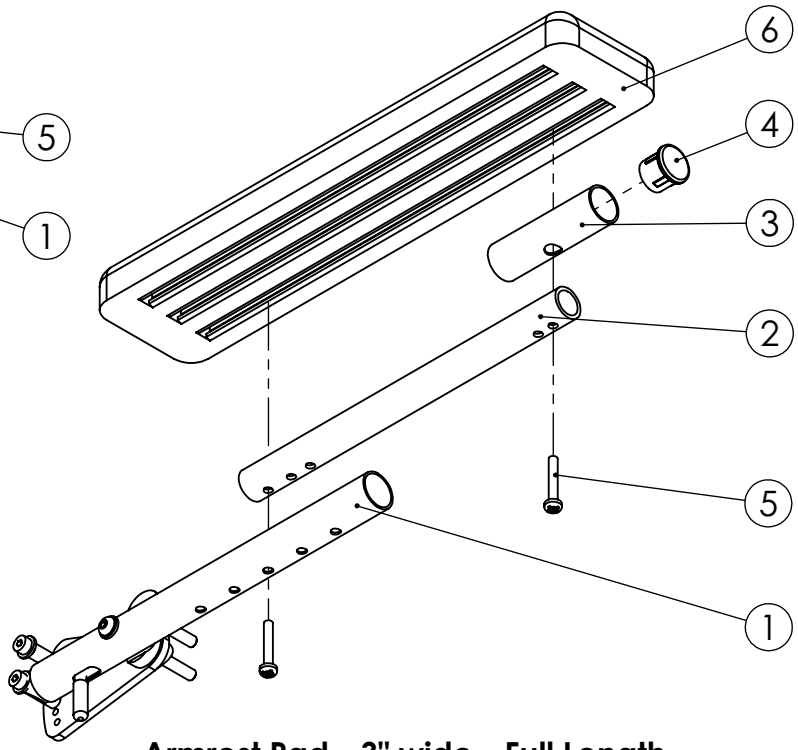

Armrest Pad - 3" wide - Full Length
Right side

Bill of Materials Flip-up Armrest, Armrest Pad - 3" wide - Full Length

ITEM NO.	QTY.	PART NO.	DESCRIPTION
1	1	5915	Armrest - Receiver Tube
2	1	5916	Armrest - Insert Tube
3	1	5917	Armrest - End Tube
4	1	1617	Tube Cap 7/8 round
5			*Use fasteners included with Arm Pad*
6	1	2275	Armrest pad - 3" wide - Full Length

Bill of Materials Flip-up Armrest, Gel Armrest 2" x 12"

ITEM NO.	QTY.	PART NO.	DESCRIPTION
1	1	5915	Armrest - Receiver Tube
2	1	5916	Armrest - Insert Tube
3	1	5917	Armrest - End Tube
4	1	1617	Tube Cap 7/8 round
5	2	2806	10-32 x 1-1/4" Socket Head CS
6	1	5102	Gel Armrests 2" x 12"
7	2	1432	Finishing Washer

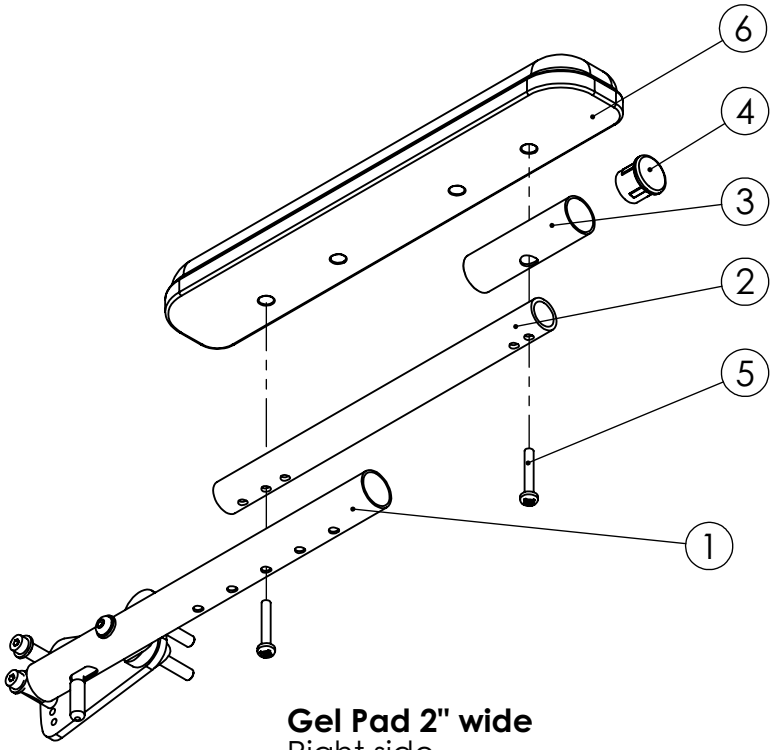

Gel Pad 2" wide
Right side

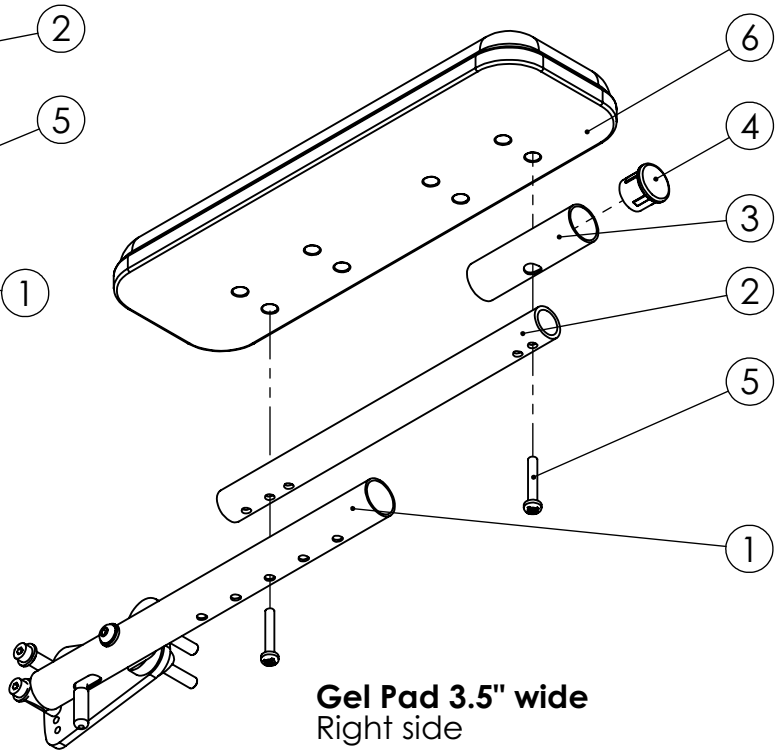

Gel Pad 3.5" wide
Right side

Bill of Materials Flip-up Armrest, Gel Armrest 3.5" x 12"

ITEM NO.	QTY.	PART NO.	DESCRIPTION
1	1	5915	Armrest - Receiver Tube
2	1	5916	Armrest - Insert Tube
3	1	5917	Armrest - End Tube
4	1	1617	Tube Cap 7/8 round
5	2	2806	10-32 x 1-1/4" Socket Head CS
6	1	5101	Gel Armrests 3.5" x 12"
7	2	1432	Finishing Washer

Rev 01

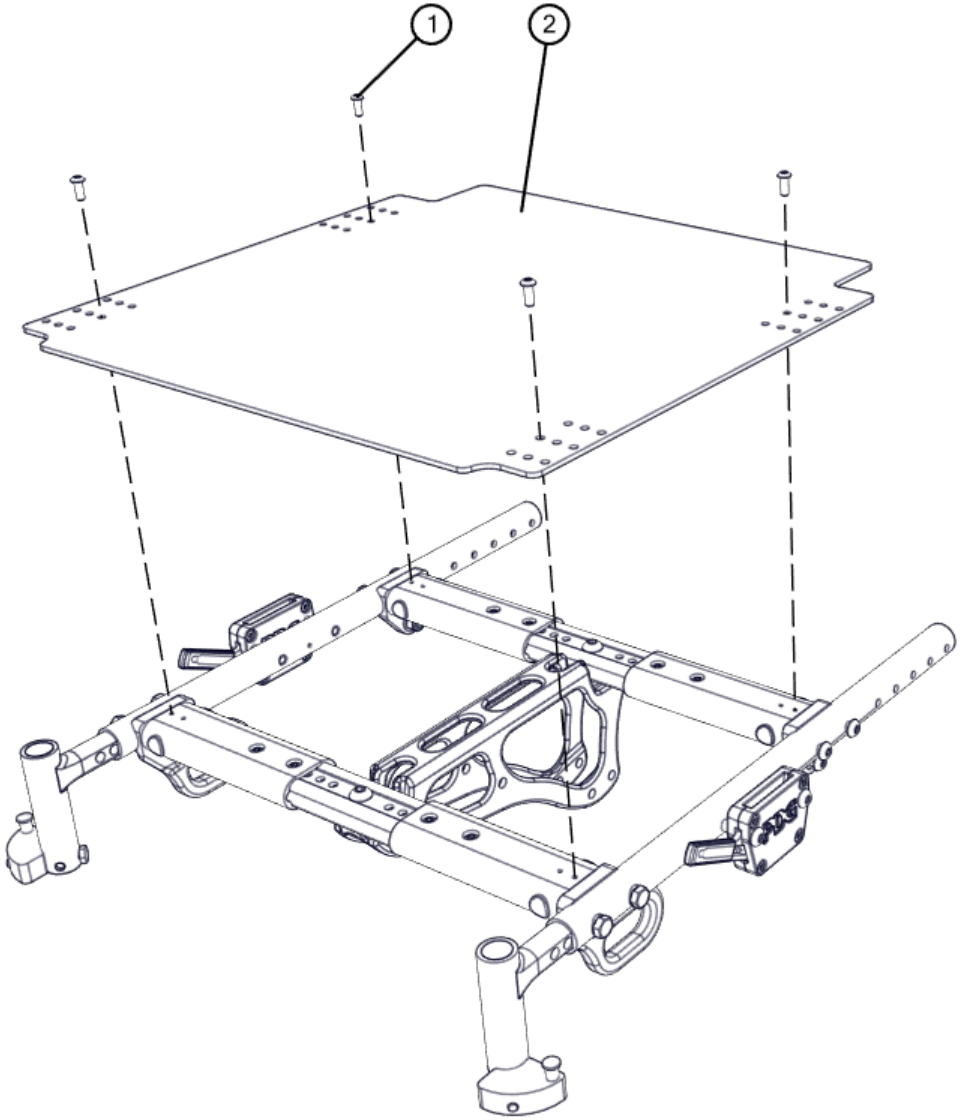

Title: Fuze T50 Seat Pan Assembly with Fixed and Adj. Crossbar
Document: 15004
Revision: 0
Date: March 2014

BOM ID	Description	Qty	PartNo
1	Fuze Seat Pan Screw	4	Pick Size
1A	10-32x1/2" Socket Button Head - Black Zinc (Adj. Crossbar)	4	1411
1B	# 8 x 3/8" self-tapping phillips pan head screw (Fixed Crossbar)	4	2549
2	Fuze Seat Pan	1	Pick Size
2A	Fuze Seat Pan 12" x 13"	1	8367
2B	Fuze Seat Pan 12" x 16"	1	8668
2C	Fuze Seat Pan 13" x 15"	1	5668
2D	Fuze Seat Pan 13" x 18"	1	6170
2E	Fuze Seat Pan 15" x 13"	1	8669
2F	Fuze Seat Pan 15" x 15"	1	5381
2G	Fuze Seat Pan 15" x 18"	1	5382
2H	Fuze Seat Pan 16" x 16"	1	7405
2I	Fuze Seat Pan 16" x 20"	1	5384
2J	Fuze Seat Pan 17" x 17"	1	7406
2K	Fuze Seat Pan 18" x 13"	1	8670
2L	Fuze Seat Pan 18" x 15"	1	7407
2M	Fuze Seat Pan 18" x 18"	1	5387
2N	Fuze Seat Pan 18" x 20"	1	5388

Rev	Revision description	ECO#
3	Update to new template, modification of T20 Setup Locations for 21" & 22" Seat Depth	1526

Seat Depth [in]	Seat Pan Hole #			Seat Width [in]										
				Junior/Standard							Standard		HD	
	T20	Junior	T50	12	13	14	15	16	17	18	19	20	21	22
13	1	1	1	12x13	12x13	12x13	15x13	15x13	15x13	18x13	18x13	18x13		
14	1	2	2	12x13	12x13	12x13	15x13	15x13	15x13	18x13	18x13	18x13		
15	1	2	1	12x13	13x15	13x15	15x15	15x15	15x15	18x15	18x15	18x15	20x15	20x15
16	1	3	1	12x16	13x15	13x15	15x15	16x16	16x16	18x15	18x15	18x15	20x15	20x15
17	1	3	1	12x16	13x15	13x15	15x15	16x16	17x17	17x17	17x17	18x15	20x15	20x15
18	1	4	2	12x16	13x18	13x18	15x18	15x18	17x17	18x18	18x18	18x18	20x18	20x18
19	1	X	3		13x18	13x18	15x18	15x18	17x17	18x18	18x18	18x18	20x18	20x18
20	1	X	4		13x18	13x18	15x18	16x20	16x20	18x20	18x20	18x20	20x20	20x20
21	2	X	4*					16x20	16x20	18x20	18x20	18x20	20x20	20x20
22	3	X	4*					16x20	16x20	18x20	18x20	18x20	20x20	20x20

*Deep Seat Extension Required (T50 Only)

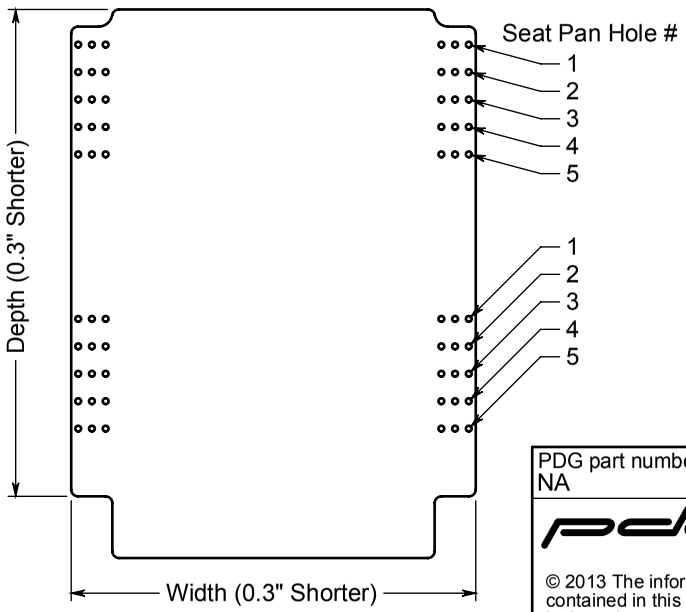

Dimensioning and Tolerancing Standard ASME Y14.5-2009

CUS: [ ]

PDG part number	Author	Technical reference	Revised by	Approved by
NA	Jim Formby	Torr Brown	Jim Formby	Torr Brown

Title: Seat Pan Default Selection

File name (Drawing #): 85025

Status: NA

© 2013 The information contained in this drawing is the sole property of PDG Mobility

Third angle projection

Tolerances unless otherwise stated:
Angular: +/- 1°
Othe x +/-0.08, x.x+/-0.04

Units	Sheet	Date of Issue	Revision
in	1 of 1	2016 Jul 08	3

Fuze T50 Axle Receiver Position

	Rear Wheel Size				
Height	**12"**	**16"**	**20"**	**22"**	**24**
13	2				
14	3	1			
15		2			
16		3	1		
17			2	1	
18			3	2	1
19				3	2
20					3

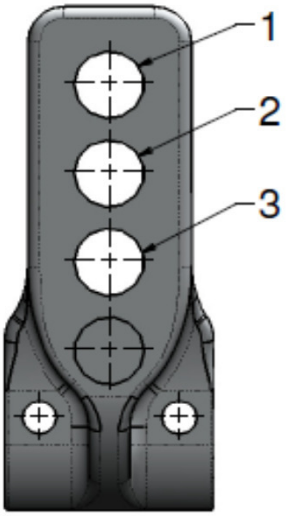

Fuze T20 Axle Receiver Position

Rear Wheel Size					
Height	**12"**	**16"**	**20"**	**22"**	**24"**
13	5	3	1		
14		4	2	1	
15		5	3	2	1
16			4	3	2
17			5	4	3
18				5	4
19					5

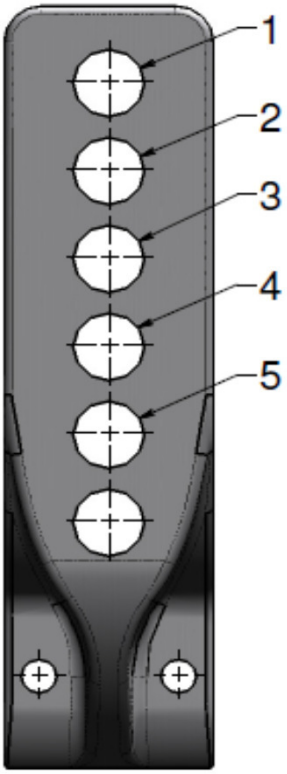

Rev.	Revision description:	ECO #
04	Updated pictures to current, addition of inverted axle plate positions, collapsed 8" Wide Fork/ 8x 2" casters configurations and included them under 8" Fork/8" Casters (All varieties).	1335

Approved by: TB	**Revised by:** BA	**Filename (Drawing #):** 85017	**Date of Issue:** Jan 21st 2013
		Sheet	2 of 2

Wheelchairs for function and independence

Canada:
103 - 318 East Kent Avenue South,
Vancouver BC V5X 4N6
Phone: 1 604-323-9220
Fax: 1 877-323-9093

USA:
PMB #173 - 1124 Fir Avenue,
Blaine WA 98230
Phone: 1 888-858-4422
Fax: 1 877-323-9093

T20 - T50 Conversion Kit Manual

Please follow steps 1 to 14

12	11	10	9	8	7	6	5	4	3	2	1

Website: www.pdgmobility.com
General Email - info@pdgmobility.com

Rev	Revision description	ECO#
1	Initial Release	NA

T20 to T50 CONVERSION KIT PARTS

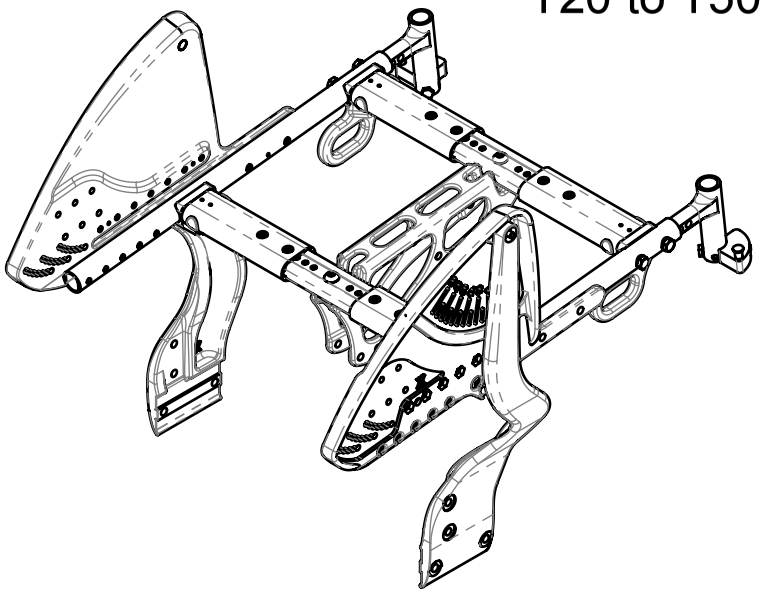

T50 Upper Frame + Pivot arms Assembly

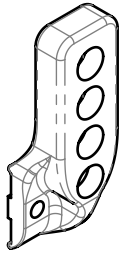

x 2

T50 Axle Plate - 3 Position

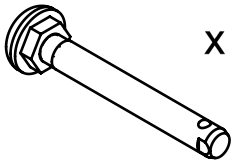

x 2

T50 Quick Release Axle - 1/2" Diameter

x 2

T50 Receiver Spacer

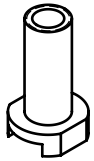

x 2

T50 Axle Reciever

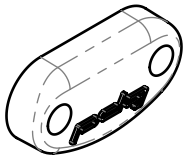

x 2

T50 Lower Frame Crossbar Cap

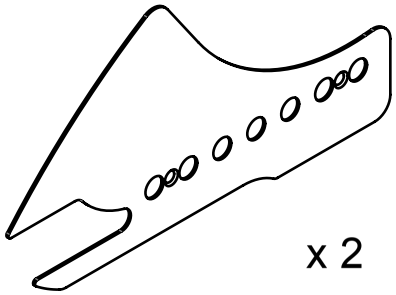

x 2

UF Pivot Plate Cover - (RH/LH)

x 4

10-24 x 3/8" flat head cap screw - Black Zinc

PDG part number	Author	Technical reference	Revised by	Approved by
NA	BA	MJ	BA	MJ

Title:	File name (Drawing #)	Status
T20 to T50 CONVERSION KIT	85041	NA

© 2010 The information contained in this drawing is the sole property of PDG Mobility

Third angle projection

Tolerances unless otherwise stated:
Angular: +/- 1°
Othe x +/-0.8, x.x+/-0.4, x.xx+/-0.15

Units	Sheet	Date of Issue	Revision
[mm]	1 of 11	2012/Jul/25	1

Dimensioning and Tolerancing Standard ASME Y14.5-2009

Rev	Revision description	ECO#
1	Initial Release	NA

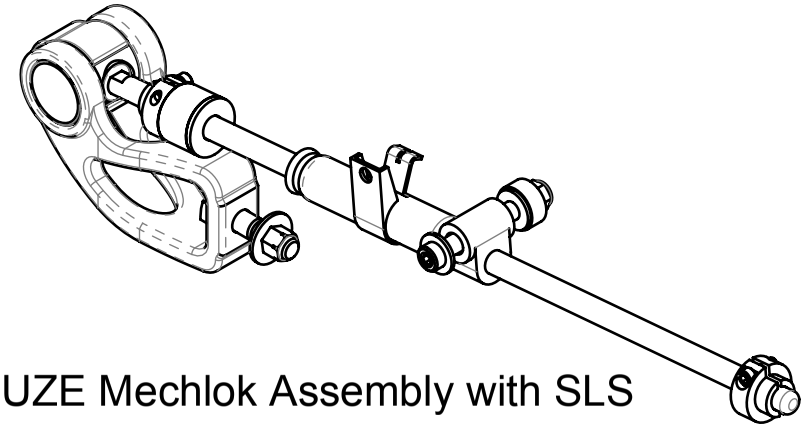

FUZE Mechlok Assembly with SLS

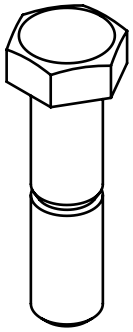

3/8-16 x 1-1/2
Hex Head Bolt

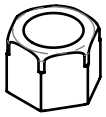

3/8-16 Nylon
Locknut - Thick -
Black Zinc

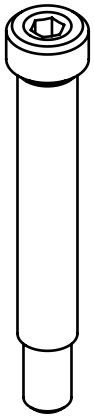

5/16 x 1-3/4" x 1/4-20 Socket
Head Shoulder Bolt - Black Zinc

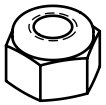

1/4-20 Nylon Locknut - Thick -
Black Zinc

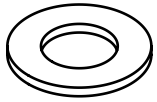

x 3

3/8" ID x 3/4" OD x
3/64" Washer Steel
Black

Dimensioning and Tolerancing Standard ASME Y14.5-2009

PDG part number	Author	Technical reference	Revised by	Approved by
NA		MJ	BA	MJ

Title:	File name (Drawing #)	Status
T20 to T50 CONVERSION KIT	85041	NA

© 2010 The information contained in this drawing is the sole property of PDG Mobility

Third angle projection	Tolerances unless otherwise stated:	Units	Sheet	Date of Issue	Revision
	Angular: +/- 1° Othe x +/-0.8, x.x+/-0.4, x.xx+/-0.15	[mm]	2 of 11	2012/Jul/25	1

Rev	Revision description	ECO#
1	Initial Release	NA

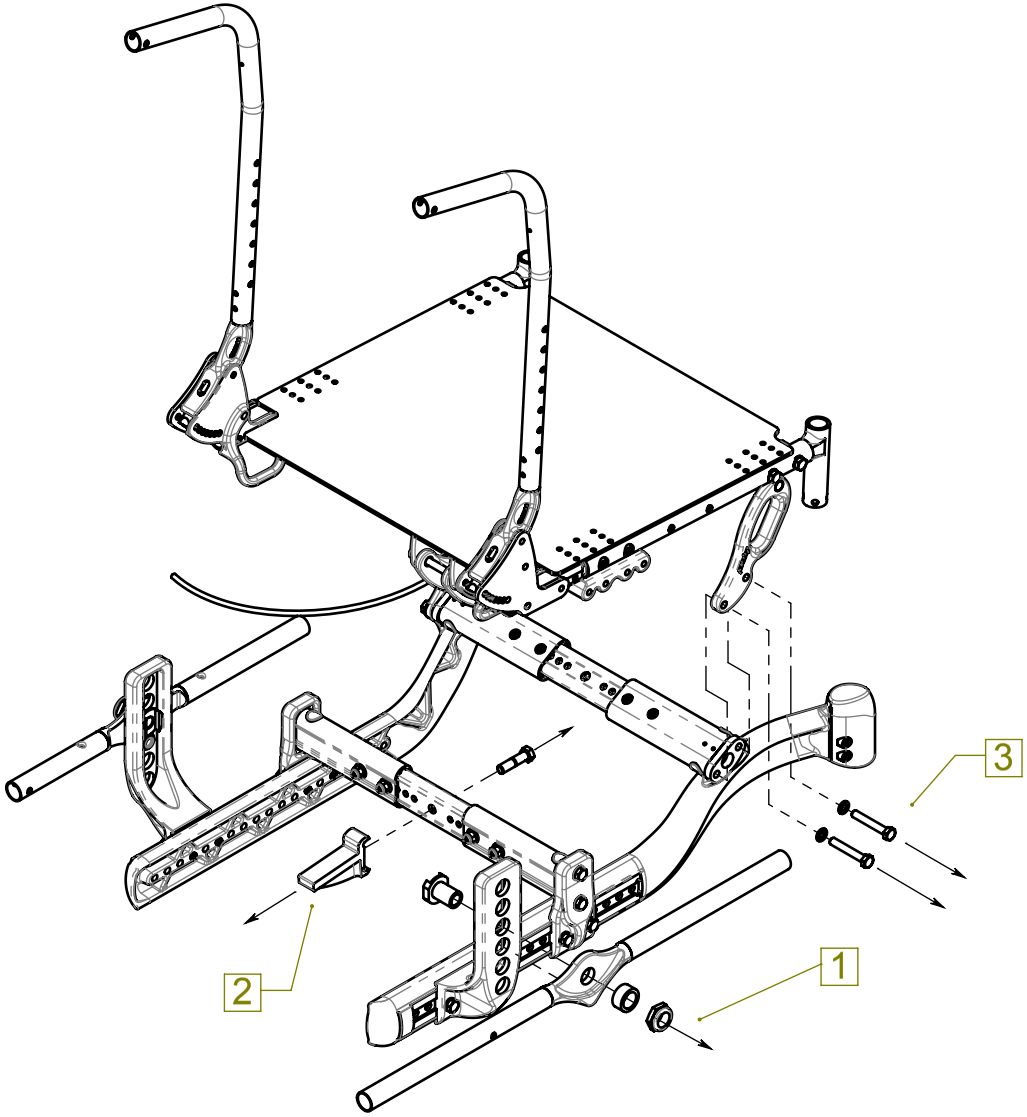

CUS: [ ]

PDG part number	Author	Technical reference	Revised by	Approved by
NA	BA	MJ	BA	MJ

pdq®	Title: T20 - T50 CONVERSION MANUAL			File name (Drawing #) 85041	Status NA
© 2010 The information contained in this drawing is the sole property of PDG Mobility	Third angle projection	Tolerances unless otherwise stated: Angular: +/- 1° Othe x +/-0.8, x.x+/-0.4, x.xx+/-0.15	Units [mm]	Sheet 3 of 11	Date of Issue 2012/Jul/25	Revision 1

Dimensioning and Tolerancing Standard ASME Y14.5-2009

Rev	Revision description	ECO#
1	Initial Release	NA

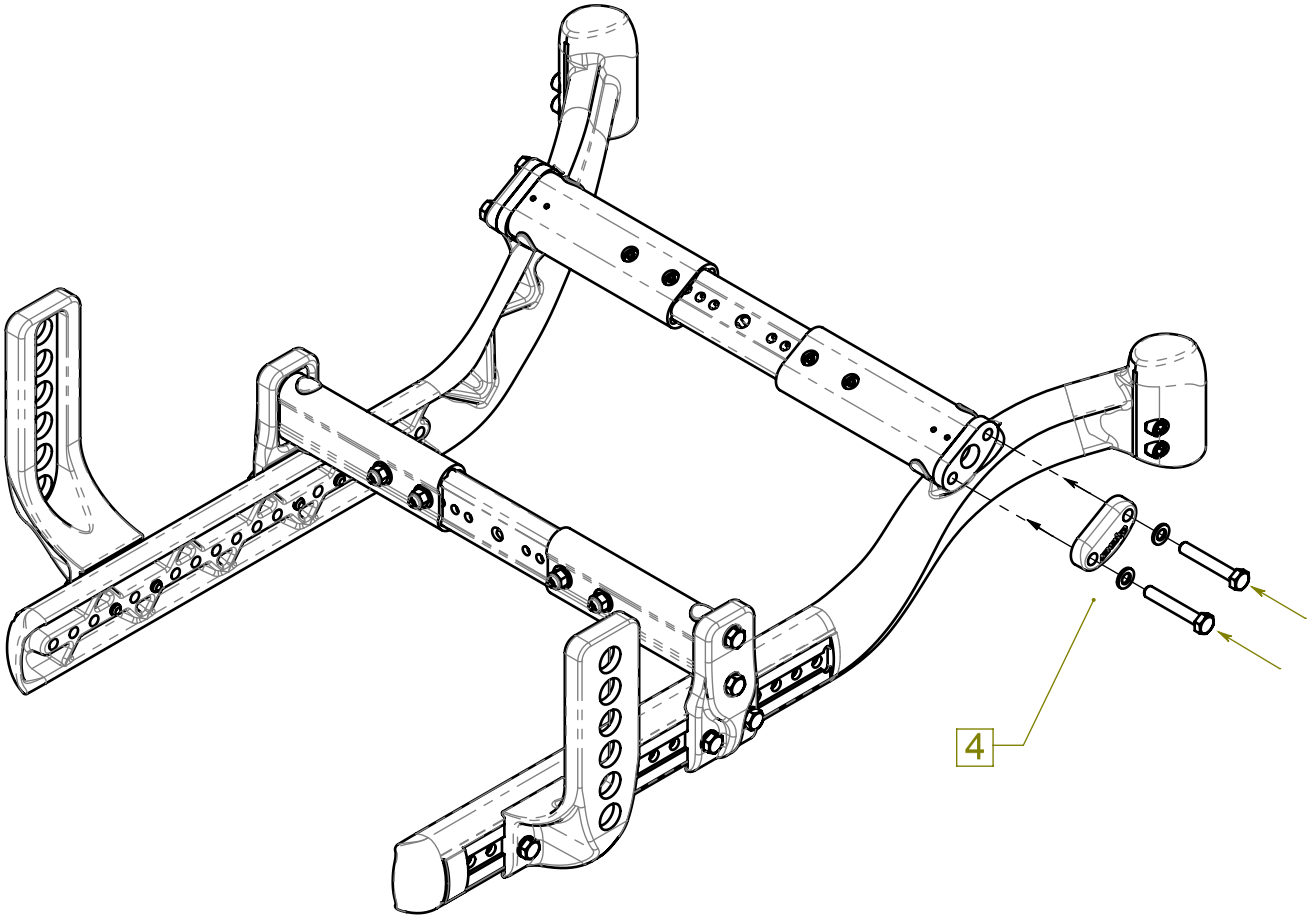

PDG part number	Author	Technical reference	Revised by	Approved by
NA	BA	MJ	BA	MJ

Title:
T20 - T50 CONVERSION MANUAL

File name (Drawing #): 85041

Status: NA

© 2010 The information contained in this drawing is the sole property of PDG Mobility

Third angle projection

Tolerances unless otherwise stated:
Angular: +/- 1°
Othe x +/-0.8, x.x+/-0.4, x.xx+/-0.15

Units [mm]

Sheet 4 of 11

Date of Issue 2012/Jul/25

Revision 1

Dimensioning and Tolerancing Standard ASME Y14.5-2009

Rev	Revision description	ECO#
1	Initial Release	NA

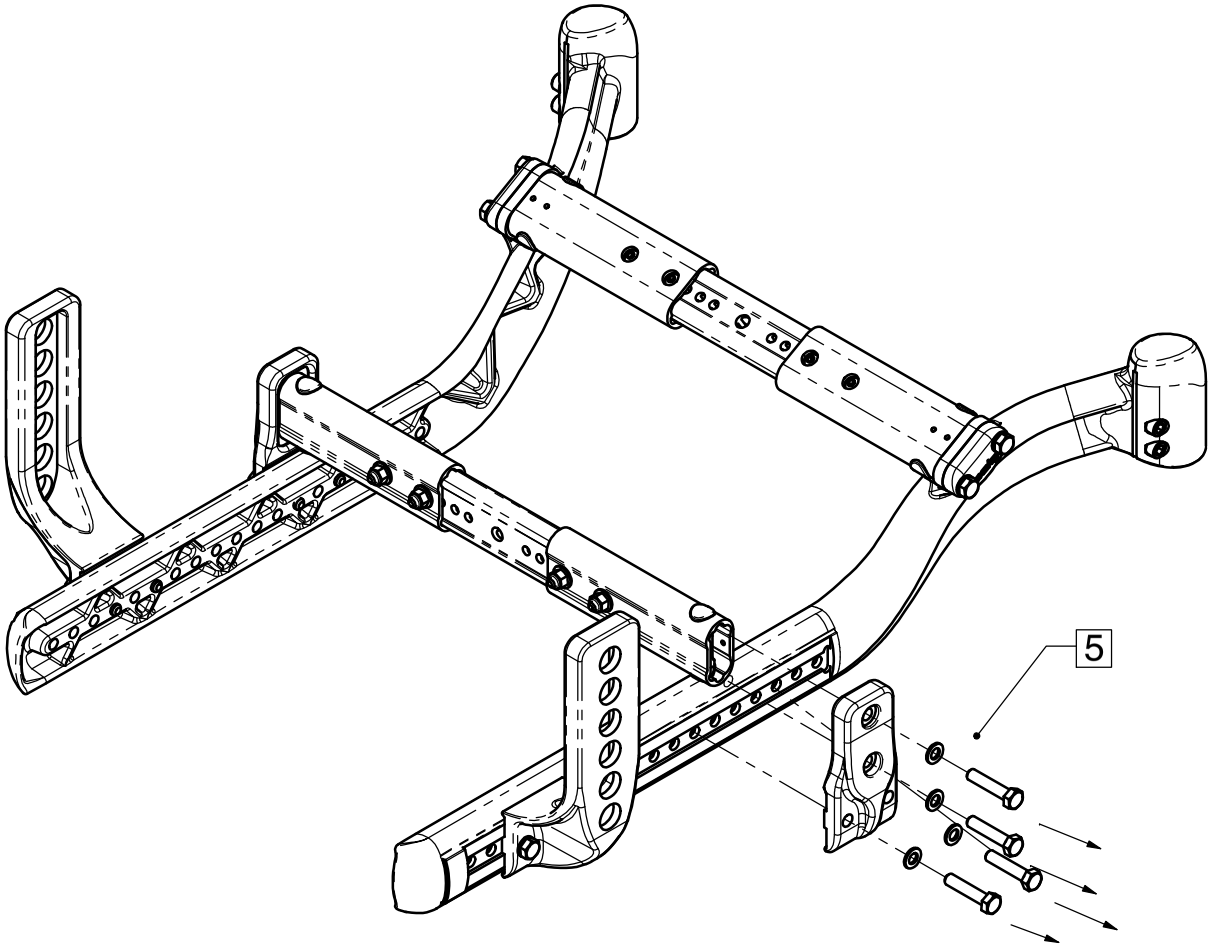

PDG part number	Author	Technical reference	Revised by	Approved by
NA	BA	MJ	BA	MJ

Title:	File name (Drawing #)	Status
T20 - T50 CONVERSION MANUAL	85041	NA

© 2010 The information contained on this drawing is the sole property of PDG Mobility

Third angle projection	Tolerances unless otherwise stated:	Units	Sheet	Date of Issue	Revision
	Angular: +/- 1º Othe x +/-0.8, x.x+/-0.4, x.xx+/-0.15	[mm]	5 of 11	2012/Jul/25	1

Dimensioning and Tolerancing Standard ASME Y14.5-2009

Rev	Revision description	ECO#
1	Initial Release	NA

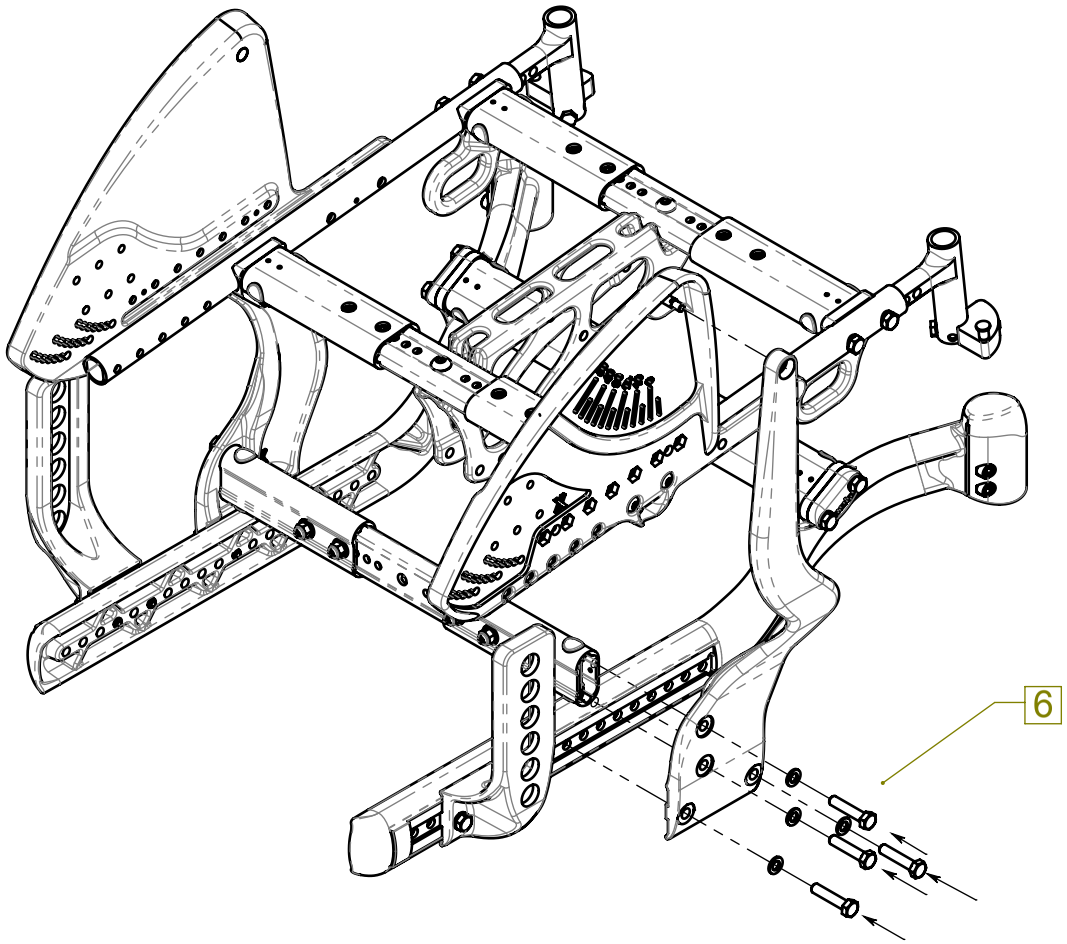

PDG part number	Author	Technical reference	Revised by	Approved by
NA	BA	MJ	BA	MJ

pdq®	Title: T20 - T50 CONVERSION MANUAL			File name (Drawing #) 85041	Status NA
© 2010 The information contained in this drawing is the sole property of PDG Mobility	Third angle projection	Tolerances unless otherwise stated: Angular: +/- 1° Othe x +/-0.8, x.x+/-0.4, x.xx+/-0.15	Units [mm]	Sheet 6 of 11 / Date of Issue 2012/Jul/25	Revision 1

Dimensioning and Tolerancing Standard ASME Y14.5-2009

Rev	Revision description	ECO#
1	Initial Release	NA

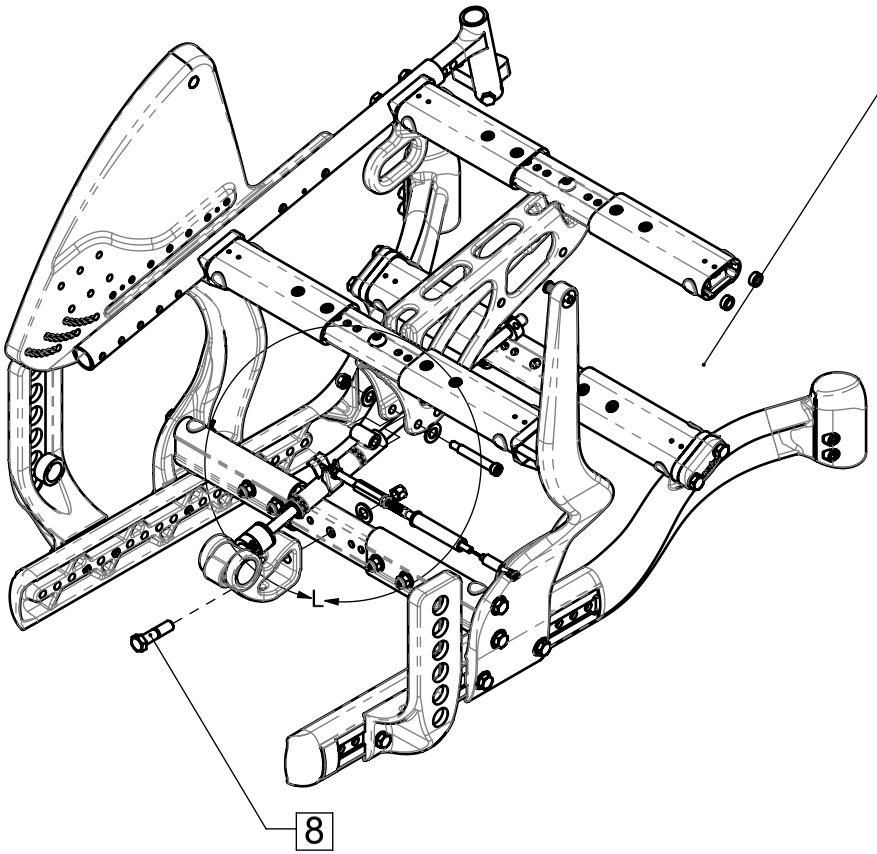

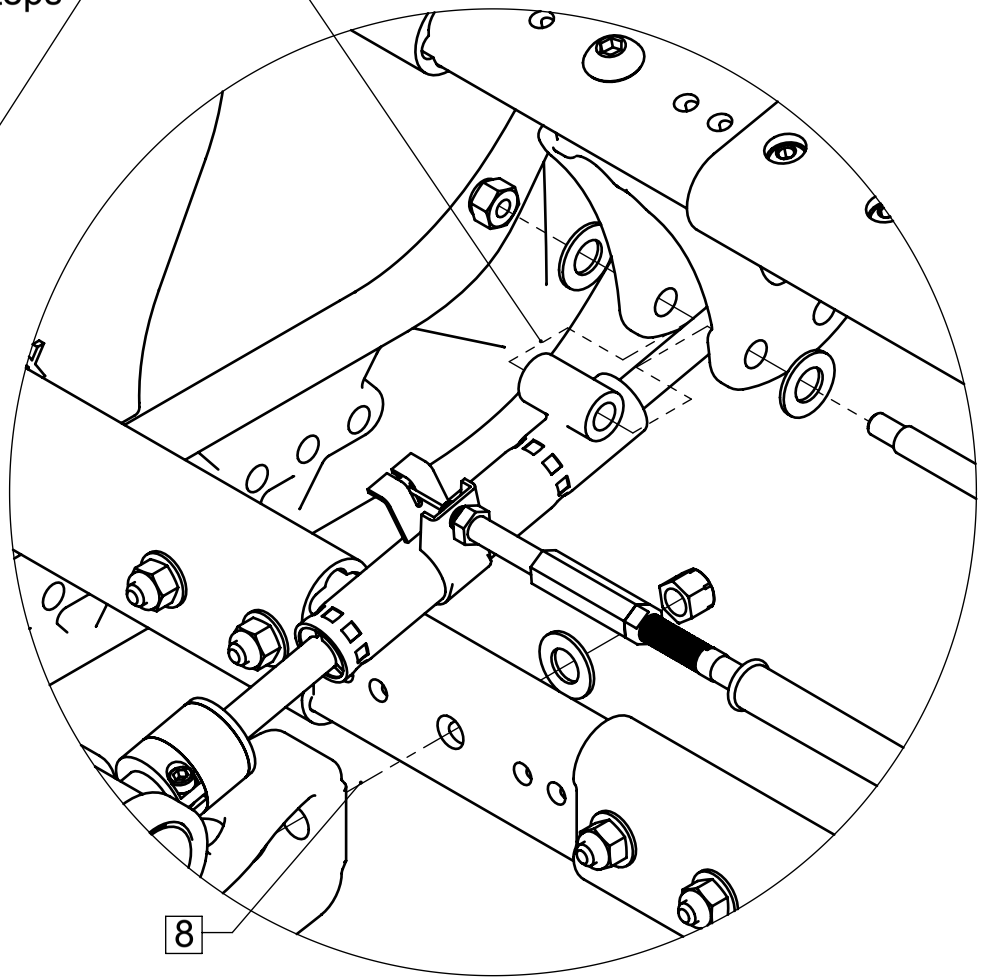

PDG part number	Author	Technical reference	Revised by	Approved by
NA	BA	MJ	BA	MJ

pdg®	Title: T20 - T50 CONVERSION MANUAL			File name (Drawing #) 85041	Status NA
© 2010 The information contained in this drawing is the sole property of PDG Mobility	Third angle projection	Tolerances unless otherwise stated: Angular: +/- 1° Othe x +/-0.8, x.x+/-0.4, x.xx+/-0.15	Units [mm]	Sheet 7 of 11	Date of Issue 2012/Jul/25	Revision 1

Dimensioning and Tolerancing Standard ASME Y14.5-2009

Rev	Revision description	ECO#
1	Initial Release	NA

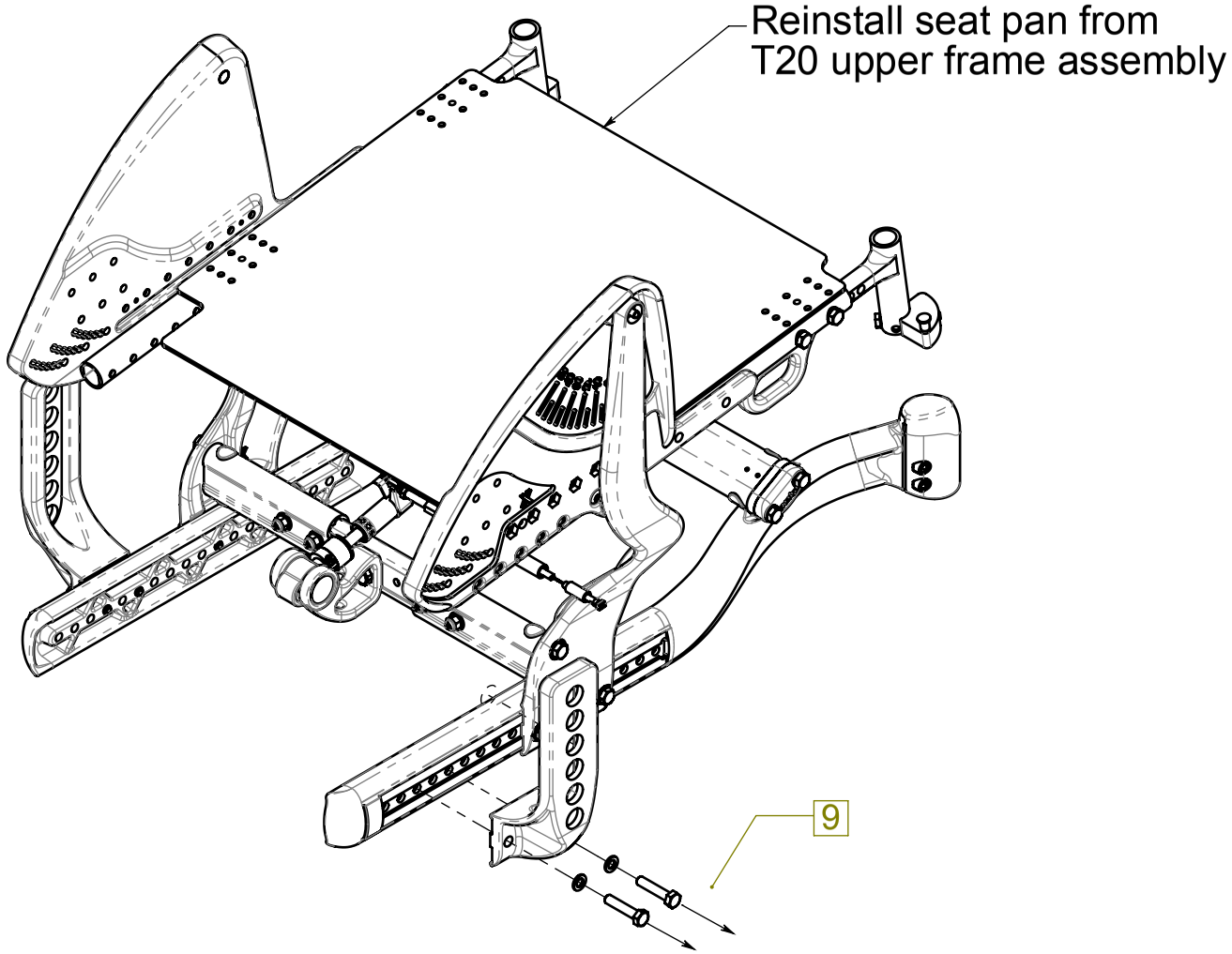

Dimensioning and Tolerancing Standard ASME Y14.5-2009

PDG part number	Author	Technical reference	Revised by	Approved by
NA	BA	MJ	BA	MJ

pdg®	Title: T20 - T50 CONVERSION MANUAL		File name (Drawing #) 85041	Status NA
© 2010 The information contained in this drawing is the sole property of PDG Mobility	Third angle projection	Tolerances unless otherwise stated: Angular: +/- 1° Othe x +/-0.8, x.x+/-0.4, x.xx+/-0.15	Units [mm]	Sheet 8 of 11	Date of Issue 2012/Jul/25	Revision 1

Rev	Revision description	ECO#
1	Initial Release	NA

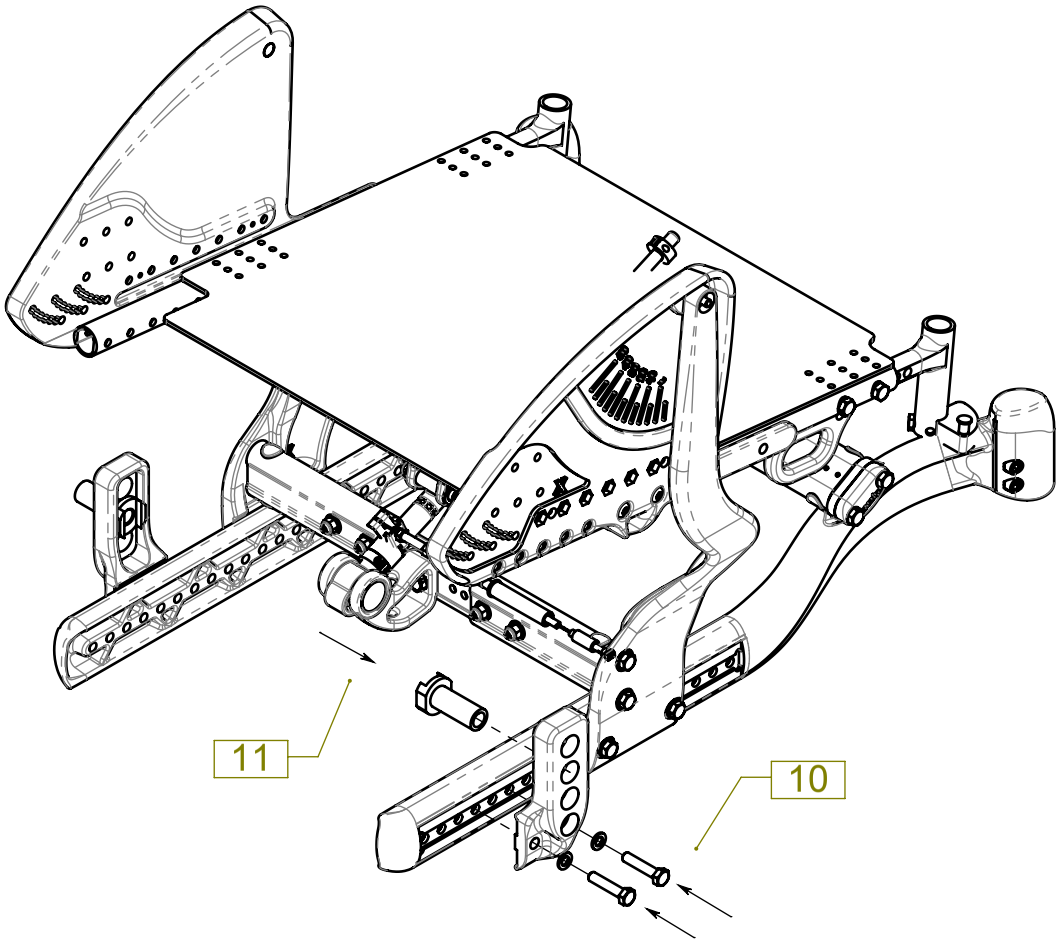

PDG part number	Author	Technical reference	Revised by	Approved by
NA	BA	MJ	BA	MJ

Title:
T20 - T50 CONVERSION MANUAL

File name (Drawing #): 85041

Status: NA

© 2010 The information contained in this drawing is the sole property of PDG Mobility

Third angle projection

Tolerances unless otherwise stated:
Angular: +/- 1°
Othe x +/-0.8, x.x+/-0.4, x.xx+/-0.15

Units	Sheet	Date of Issue	Revision
[mm]	9 of 11	2012/Jul/25	1

Dimensioning and Tolerancing Standard ASME Y14.5-2009

Rev	Revision description	ECO#
1	Initial Release	NA

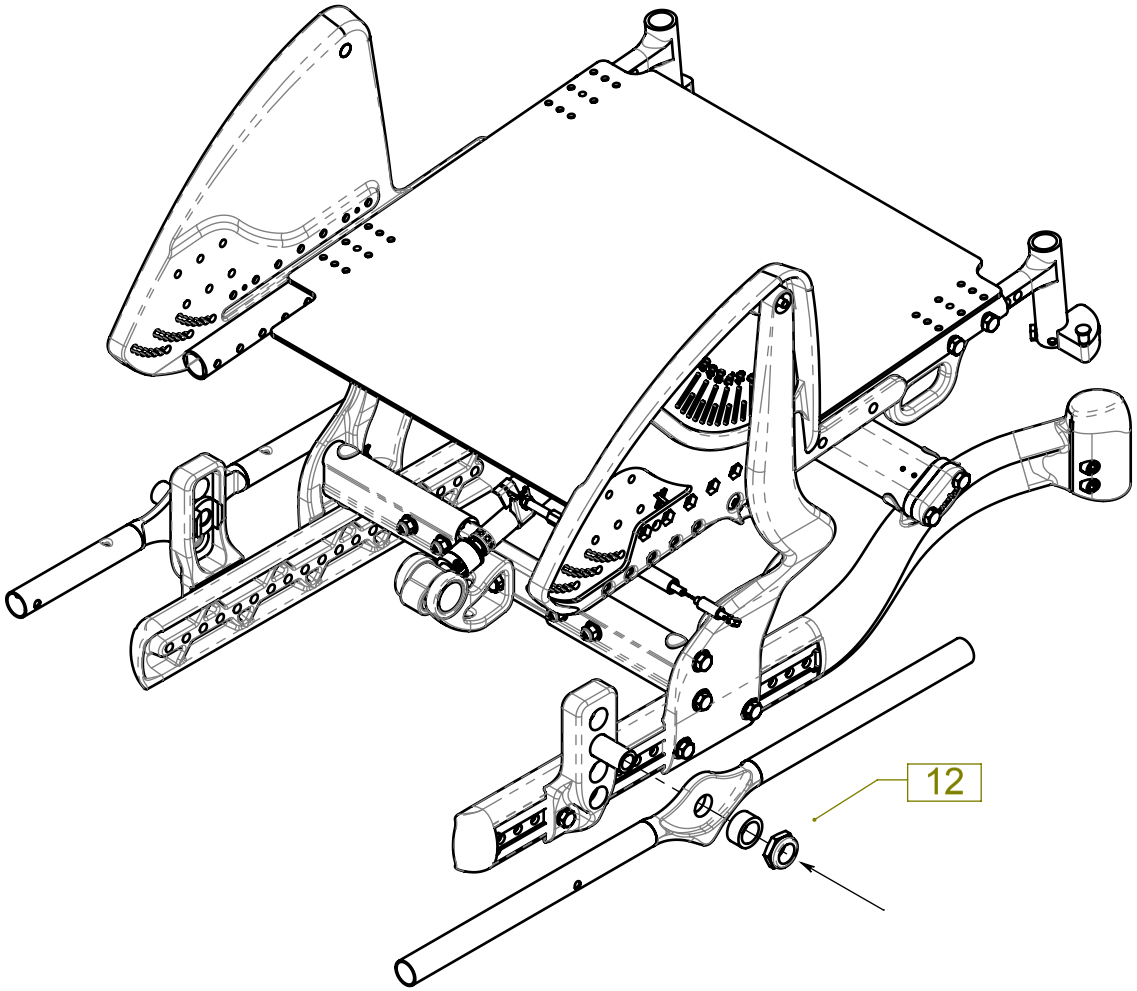

PDG part number	Author	Technical reference	Revised by	Approved by
NA	BA	MJ	BA	MJ

Title: T20 - T50 CONVERSION MANUAL

File name (Drawing #): 85041

Status: NA

© 2010 The information contained in this drawing is the sole property of PDG Mobility

Third angle projection

Tolerances unless otherwise stated:
Angular: +/- 1°
Othe x +/-0.8, x.x+/-0.4, x.xx+/-0.15

Units	Sheet	Date of Issue	Revision
[mm]	10of 11	2012/Jul/25	1

Dimensioning and Tolerancing Standard ASME Y14.5-2009

Rev	Revision description	ECO#
1	Initial Release	NA

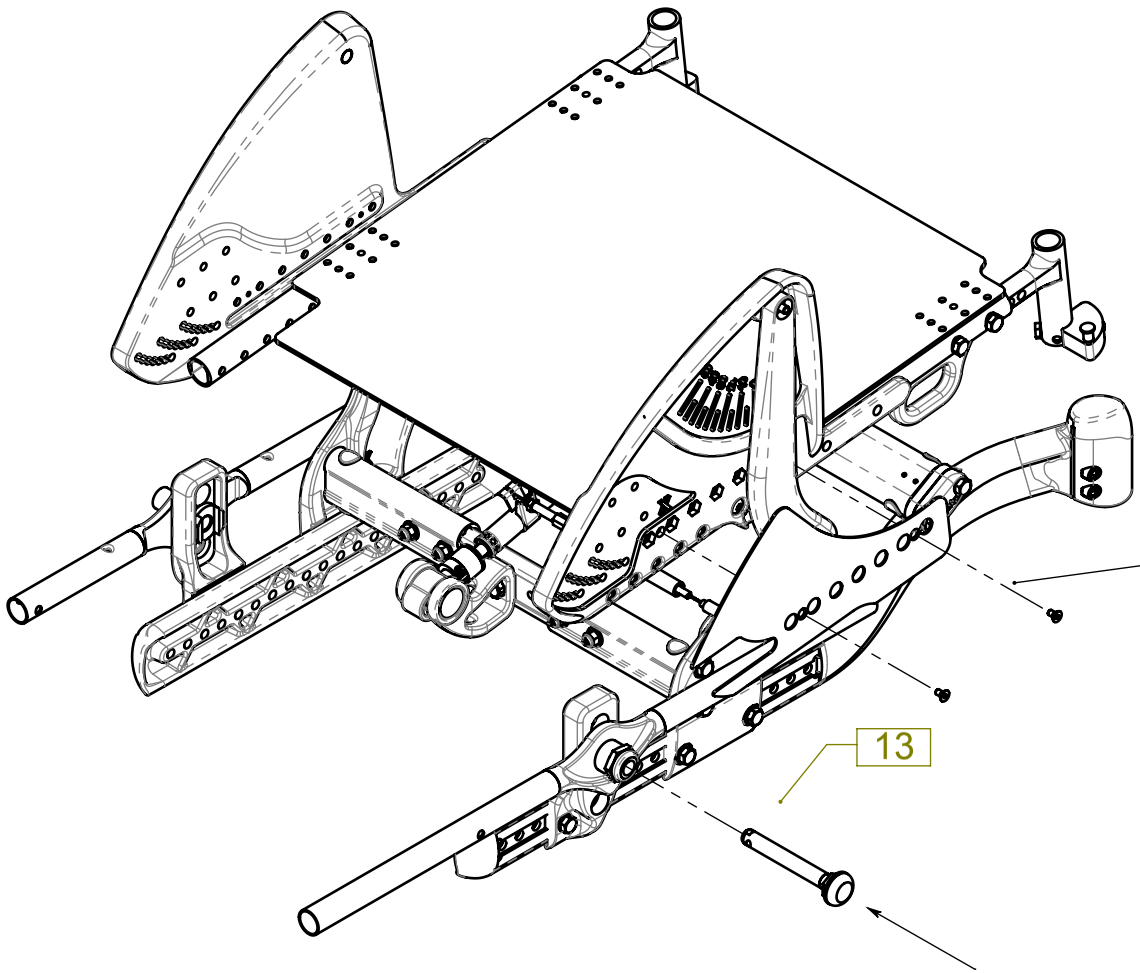

Install T50 upper frame pivot plate cover plates after refitting/installing back case

Dimensioning and Tolerancing Standard ASME Y14.5-2009

PDG part number	Author	Technical reference	Revised by	Approved by
NA	BA	MJ	BA	MJ

Title: T20 - T50 CONVERSION MANUAL

File name (Drawing #): 85041

Status: NA

© 2010 The information contained in this drawing is the sole property of PDG Mobility

Third angle projection

Tolerances unless otherwise stated:
Angular: +/- 1°
Othe x +/-0.8, x.x+/-0.4, x.xx+/-0.15

Units	Sheet	Date of Issue	Revision
[mm]	11of 11	2012/Jul/25	1